OMRON

Machine Safety Guide 2011

Creating a safe
industrial world!

realizing

TECHNOGR SAFETY SERVICE

Your partner for industrial machine safety throughout the entire machine lifecyle.

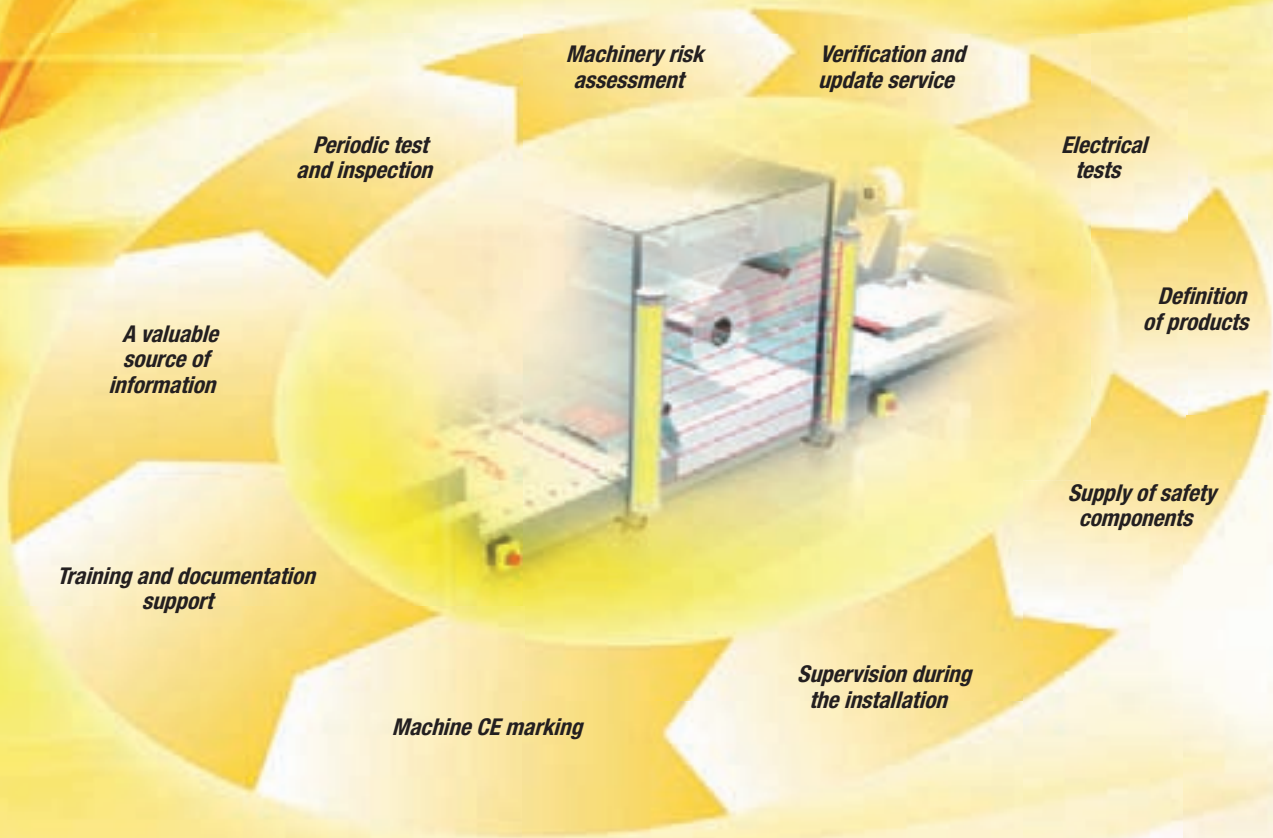

TECHNO GR
Member of Omron Europe

Content

Creating a safe industrial world

Nowadays, all responsible industries recognise the duty of care they owe their employees.

Taking all possible measures to avoid accidents in the workplace is not only a moral obligation, it also makes sound financial sense. Accidents are expensive – not only in lost working days, compensation for injury and higher insurance premiums, but also in other costs less easy to quantify like disrupted production, and the costs of accident investigations and of training new personnel to replace those injured in industrial accidents.

In every way, therefore, creating a safe industrial environment is a wise investment. Omron has many years' experience working closely with the world's leading machine manufacturers and with governing bodies that define today's international safety standards.

SELECTED INDUSTRY APPLICATIONS

MACHINE DIRECTIVE AND EUROPEAN STANDARDS

PRODUCT INFORMATION

Safe sensing elements

Control- and signalling devices

Pushbutton switches
Modular signal towers
E-Stop pushbuttons
Rope pull switches

page 30

Safety limit switches

Plastic housing
Metal housing
Safety hinge switches
Mechanical reset

page 52

Safety Door switches

Non-contact switches
Key operated switches
Door locking switches

page 60

Safety Sensors

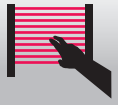

Type 2 sensors
Type 4 sensors
Finger protection
Hand protection
Body protection
Area guarding

page 72

Safe Control Systems

Safety Relay Units

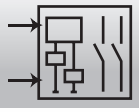

Small housing 22,5 mm
Expandable with OFF-delay time
Two-hand controller

page 90

Flexible Safety Units

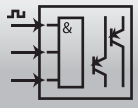

Safety Guard Switching
Safe standstill monitoring
Safety Limited Speed monitoring
Non-contact door monitoring
Logical “AND”-connection

page 96

Safety Controllers

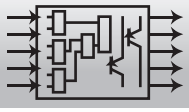

Standalone programmable Controllers
DeviceNet Safety and EthernetIP programmable Controllers

page 102

Safe Actuating elements

Safety Relays

4-pole safety relays
6-pole safety relays

page 111

Contactor with Safety function

Compact Contactor up to 160A

page 112

Safety Drives

Inverter with Safety function
Servo drive with Safety function

page 113

SAFETY IN MATERIAL HANDLING & LOGISTICS

Global products for a safe local stop

A smooth and disturbance free operation is key for today's global distribution systems.

- Reliable products to stop only in case of an emergency for disturbance free operation.
- Global sourcing of products based on Omron's worldwide representatives for smooth maintenance.

BASICS FIRST

The Basic element to be used at certain danger points in every machine is the Emergency stop pushbutton. Its special design makes it easy for workers to recognize which pushbutton to press in case of a dangerous situation. At least one of them is mounted on every machine.

More on Emergency Stop Pushbuttons A22E on page 37

EMERGENCY STOP ON THE LINE

Mounting and wiring Emergency Stop pushbuttons on a conveyor system takes a lot of time and effort.

Omron Rope pull safety switches provide the safety function along the whole rope span and help to reduce installation, setup and maintenance cost.

More on ER-series Rope Pull Emergency Stop Switches on page 38

SAFETY CHECKPOINT

Areas that operate automatically need protection. This can be done in many cases by using fixed guards. A safe and reliable seperation between a person and material is the key where material needs to go into or out of an automatic operating area. Omron Muting Control Systems and Muting Sensors are safeguarding these checkpoints.

NO TRESPASSING

Fences as a protective measure are commonly used to prevent access of persons to dangerous areas. Access is only allowed via maintenance doors when the machine is stopped. Omron Safety Door Switches detect if the door is open by use of well proved principles and prevent a restart of the machine if the door is open and a person is still in the machine.

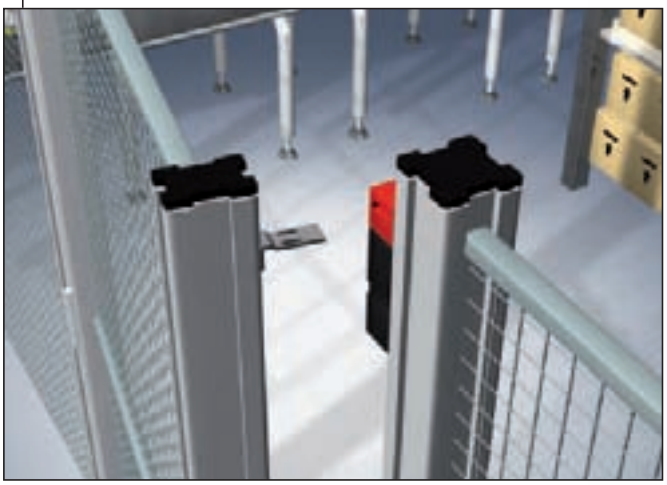

More on Safety Sensors with Muting function F3S-TGR-CL_-K_C on page 79
More on Muting Sensors E3Z in the Industrial Sensing Guide

More on Safety Door Switches D4NS on page 66

SAFETY IN FOOD PACKAGING

Made to last in demanding environments

The design of food packaging machines follows its own rules. Flexibility in packaging material and packed goods goes along with high hygienic demands and easy cleaning.

- Stainless steel housing for high detergent resistance.
- Flexible Safety Sensors design to follow machine design.
- Accessories for Safety light Curtains to improve cleaning resistance.

ENHANCED WATER RESISTANCE

Enhanced resistance against water is a key factor in food packaging industry due to the frequent cleaning cycles. Transparent plastic housings widen the applications for standard safety light curtains.

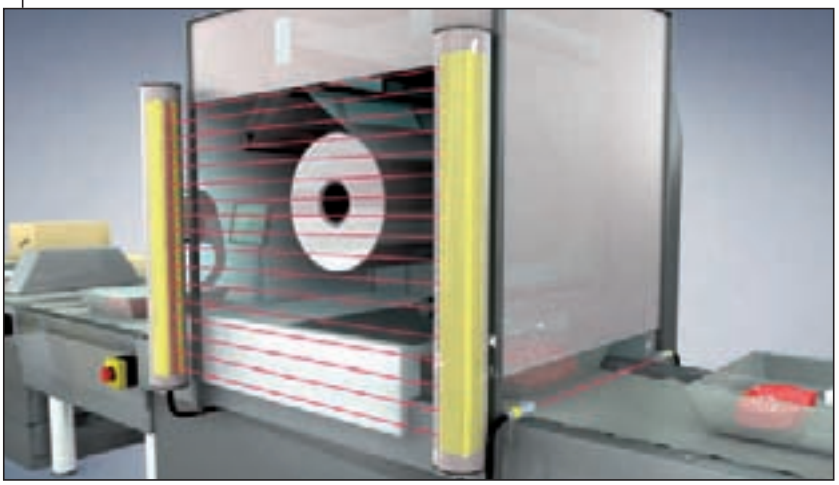

More on Safety Sensors MS2800 and MS4800 on page 75
More on Safety Sensors F3SN page 77

FLEXIBLE INSTALLATION

The design of food packaging machines follows the requirements of easy to clean design. Single beam safety sensors in compact M18 housing protect workers without a lot of extra space needed.

READY FOR CLEANING

The cleaning procedure is a key factor in food production. The high-grade 316L Stainless steel housing of the F3S-TGR-N non contact switches is designed for high detergent resistance.

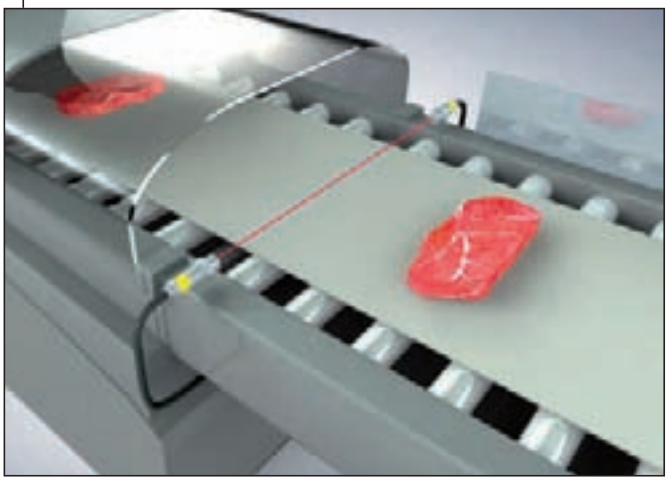

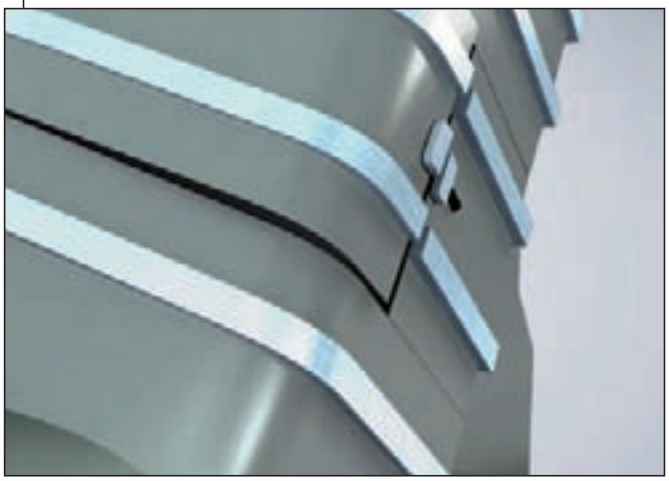

More on single beam safety sensors E3FS page 83

More on F3S-TGR_N page 68

SAFETY IN BEVERAGE INDUSTRY

Safe in normal operation and maintenance

Producing and handling of beverages is a high-speed automatic process. Flexible and modular machine design covers the growing demand for containers in various shapes and materials.

- Programmable standalone safety controllers to support modular safety control systems
- Hold-to-run devices for safe maintenance operation

FLEXIBLE INSTALLATION

Modular machine design is supported by our range of programmable standalone safety controllers G9SP, offering a simple and clear programming of the safety function, drastically reducing design and engineering effort.

More on G9SP page 100

SAFETY INSIDE

Inverters with an integrated safety function minimize time in installation, wiring and maintenance by removing the external contactors, without mechanical contacts wearing out.

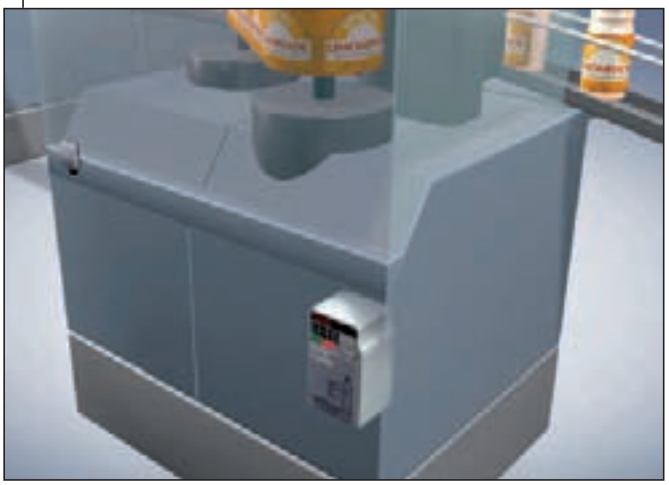

More on V1000 page 113

HAND IN HAND WITH THE ROBOT

Workers need to be very close to the dangerous area inside the machine in teach-in or maintenance mode. For maximum protection, Enabling Grip Switches as hold-to-run devices guarantee a safe stop if the worker is in danger.

MATERIAL ONLY

Preconfigured Muting Systems with integrated muting lamp reduce the time for installation, wiring and setup of the safety system.

More on Enabling Grip Switches A4EG on page 94

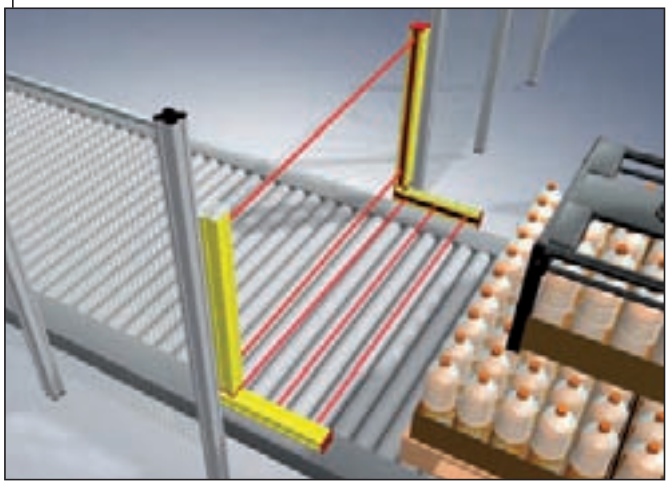

More on Muting Systems F3S-TGR-CL_-K_C on page 79

SAFETY IN THE AUTOMOTIVE PARTS INDUSTRY

Zero defect, zero stop production

Producing high quality parts to order for the automotive industry requires the highest precision and machine availability during production. Robust and reliable design of the Safety System ensures minimum downtime and maximum productivity.

ENHANCED DURABILITY

Enhanced mechanical durability is a key factor in the automotive industry. Robust stands protect standard safety light curtains and minimize installation and maintenance downtime of the machine.

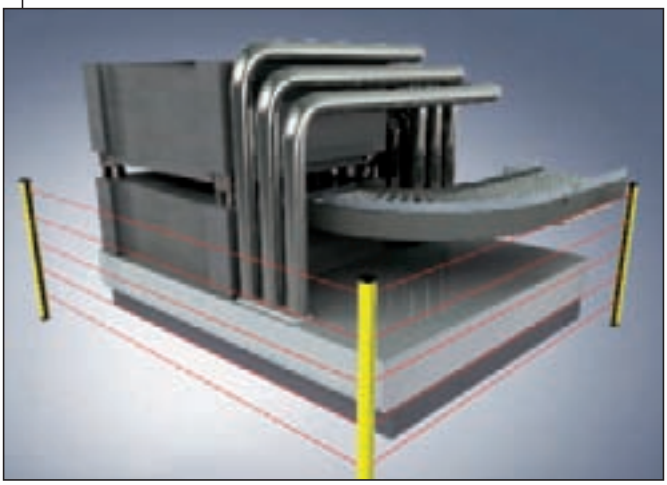

More on MS4800 page 75
More on F3S-TGR-CL page 79

CLEAR GUIDANCE

Mechanical and electrical durability is a key feature of signal towers since machine operators rely on the signals they show. LED modules together with an impact and heat resistant ABS resin housing are the elements to give clear guidance of the operator for a long service life.

More on LME Signal towers page 50

FLEXIBILITY IS KEY

Advanced intelligence in safety light curtains with precise detection capability allow close co-work between man and machine. Manually guided bending of metal is one of the applications.

More on MS4800 page 75
More on F3S-TGR-CL on page 79

ROBOT IN A CAGE

Robots are moving fast and carry heavy loads. Fixed guards protects workers from being hit by the robot or parts handled by the robot. Doors in the guards allow access to the robot in maintenance mode if the robot is stopped and the Safety Door locking switch is released.

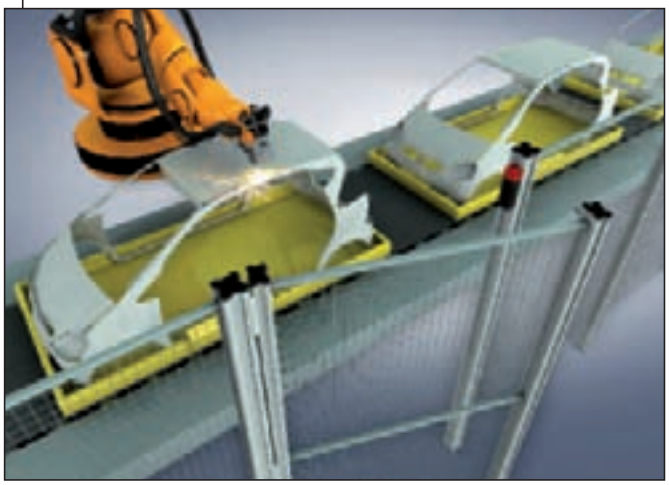

More on D4GL page 64

SAFETY IN SEMICONDUCTOR, PHOTOVOLTAIC & ELECTRONICS INDUSTRY

For small, fast and flexible machines

Continuous miniaturisation and higher performance of electronic components and the ever increasing pressure to increase productivity, result in the demand for small sized, specialised safety systems with the highest value-performance ratio.

- Optimized safety components for dedicated applications
- Reliable Safety Components for Never Stop Machines

CONTROL AND SIGNALLING ALIGNED

Stopping a process in the electronics or photovoltaic industry by accident will lead to a big loss of time and money.
To prevent unintentional pressing of an Emergency Stop pushbutton, specially designed mounting kits provide an even machine surface.
If a machine stops during production, a fast reaction of the operator is needed. LED signal towers show to the operator, where to react first to minimize downtime and production loss.

WIRING IN MODULAR MACHINES MADE EASY

Covers and doors in the electronics industry are frequently used in maintenance or to check production. Monitoring is made easy by providing a system with up to 30 non-contact switches connected to one flexible safety unit, still providing individual diagnosis on every switch.

More on Emergency stop pushbuttons A22E page 37
More on signal towers LU5 page 41

More on Non-contact system D40A page 92
More on signal towers LU7 page 45

SAFE POWER CONTROL

Forcibly guided contacts and a track mounting socket control pumps or heaters in small machines safely. For higher currents, contactors with integrated safety function are the right choice.

More on Safety Relays G7SA page 111
More on Contactors with safety function G7Z page 112

MACHINE DIRECTIVE AND EUROPEAN STANDARDS

Basic procedure for complying with the requirements of the Machinery Directive

The EU Machinery Directive stipulates that machinery should not present a risk to persons working in an industrial area (risk assessment in accordance with EN1050 or EN ISO 14121-1). Given that there is no zero risk in technology, the target is to achieve an acceptable residual risk which may vary in the European countries, based on additional local technical test and maintenance rules.

If safety is dependent on control systems, these must be designed so that the probability of functional errors is sufficiently low. If this isn't possible, any errors that occur shall not lead to the loss of the safety function. To meet this requirement it makes sense to use harmonized standards that have been created in accordance with a mandate from the European Commission and are published in the Official Journal of the European Communities (presumption of conformity). This is the only way to avoid spending extra time and effort demonstrating conformity in the event of a claim.

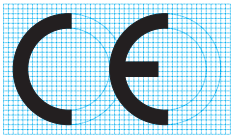

Machine Directive 2006/42/EC is in place since December 29th, 2009 and is very clear in the requirements regarding risk assessment and documentation for the use of the machine along the complete lifecycle, including design, manufacturing, setting-up, operation, maintenance and finally putting the machine out of service.

For full version of Machine Directive, please check:

- http://ec.europa.eu/enterprise/sectors/mechanical/machinery

Harmonized Standards

The Past: EN954-1

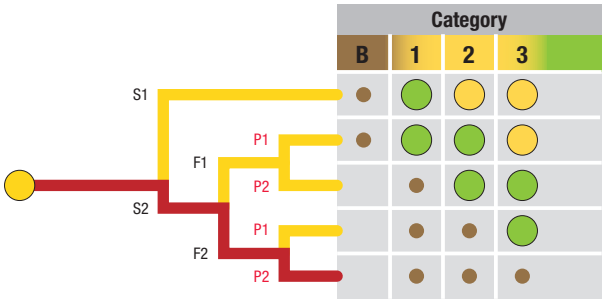

In the past, the safety related parts of a machine's control system were designed in accordance with EN954-1. This was based on the calculated risk and formed into safety categories. The aim was to set an appropriate system behaviour ("control class") against a category. Once electronics, and programmable electronics in particular, had made their mark on safety technology, safety could no longer be measured purely in terms of the simple category system found in EN 954-1. Furthermore, it was unable to provide information on probability of failure.

Presence and future: EN ISO 13849-1 and EN62061

Now, there are two standards dealing with safety of machinery listed under machine directive: EN ISO 13849-1 and EN 62061. Both of them are suitable for a certain range of technology used in machines and below table can be found in both standards:

	Technology implementing the safety-related control function(s)	EN ISO 13849-1	EN 62061
A	Non-electrical, e.g. hydraulics	applicable	not covered
B	Electromechanical, e.g. relays, and/or non complex electronics	Restricted to designated architectures and up to PL = e	All architectures and up to SIL3
C	Complex electronics, e.g. programmable	Restricted to designated architectures and up to PL = d	All architectures and up to SIL3
D	A combined with B	Restricted to designated architectures and up to PL = e	For non-electrical technology, use parts in accordance with ISO 13849 as subsystems
E	C combined with B	Restricted to designated architectures and up to PL = d	All architectures and up to SIL 3
F	C combined with A, or C combined with A and B	For complex electronics: use designated architectures according to EN ISO 13849 up to PL = d or any architecture according to EN 62061	For non-electrical technology, use parts in accordance with ISO 13849 as subsystems

A) EN ISO 13849-1:

Safety related parts of control systems, Part 1: General principles for design.

This standard may be applied to SRP/CS (safety-related parts of control systems) and all types of machinery, regardless of the type of technology and energy used (electrical, hydraulic, pneumatic, mechanical, etc.). EN ISO 13849-1 also lists special requirements for SRP/CS with programmable electronic systems.

Brief overview:

EN ISO 13849-1 is based on the familiar categories from EN 954-1:1996. It examines complete safety functions, including all the components involved in their design.

EN ISO 13849-1 goes beyond the qualitative approach of EN 954-1 to include a quantitative assessment of the safety functions. A performance level “PL” is used for this, building upon the categories.

Components/devices require the following safety parameters:

- Category (structural requirement)
- PL: Performance level
- $MTTF_d$: Mean time to dangerous failure
- B_{10d}: Number of cycles by which 10% of a random sample of wearing components have failed dangerously
- DC: Diagnostic coverage
- CCF: Common Cause Failure
- T_M: Mission time

The standard describes how to calculate the performance level (PL) for safety-related parts of control systems, based on designated architectures, for the designated mission time T_M.

A basic set of Safety parameters for the calculation is mentioned in the EN ISO 13849-1. Additionally Omron supplies these parameters for certain product families on demand. Therefore please refer to the technical information in this guide or contact your Omron partner.

EN ISO 13849-1 refers any deviations to IEC 61508. Where several safety-related parts are combined into one overall system, the standard describes how to calculate the PL that can be achieved.

For additional guidelines on validation EN ISO 13849-1 refers to Part 2 of this standard, which was published at the end of 2003. This part provides information on fault considerations, maintenance, technical documentation and usage guidelines.

B) EN62061:

Functional safety of safety-related electrical, electronic and programmable electronic control systems.

This standard defines requirements and gives recommendations for the design, integration and validation of safety-related electrical, electronic and programmable electronic control systems (SRECS) for machinery. It does not define requirements for the performance of non-electrical (e.g. hydraulic, pneumatic, electromechanical) safety-related control elements for machinery.

Brief overview:

EN 62061 represents a sector-specific standard under IEC 61508. It describes the implementation of safety-related electrical and electronic control systems on machinery and examines the overall lifecycle from the concept phase through to decommissioning. Quantitative and qualitative examinations of the safety-related control functions form the basis.

The performance of the safety system is described through the safety integrity level (SIL).

The safety functions identified from the risk analysis are divided into safety sub-functions; these safety sub-functions are then assigned to actual devices, called subsystems and subsystem elements. Both hardware and software are handled this way.

A safety-related control system is made up of several subsystems. The safety-related characteristics of these subsystems are described through parameters (SIL claim limit and PFH_D).

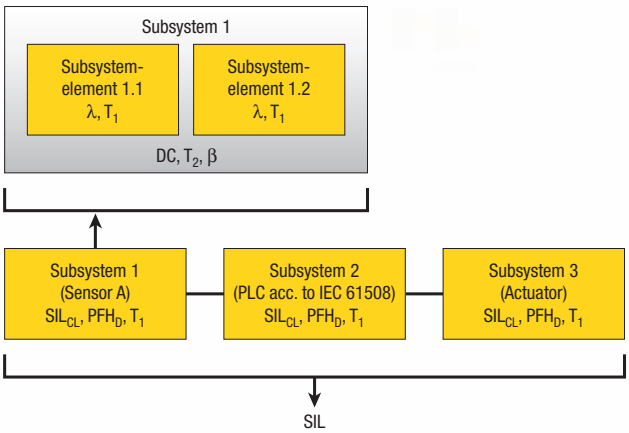

Safety-related parameters for subsystems:

- SIL_{CL}: SIL claim limit
- PFH_D: Probability of dangerous failure per hour
- T_1: Lifetime

These sub-systems may in turn be made up of various interconnected sub-system elements (devices) with parameters to calculate the sub-system's corresponding PFH_D value.

Safety-related parameters for sub-system elements (devices):

- λ: Failure rate; for wearing elements: describe via the B_{10} value
- SFF: Safe failure fraction

On electromechanical devices the failure rate is indicated by the manufacturer as a B_{10} value, based on the number of cycles. The time-based failure rate and lifetime must be determined through the switching frequency for the respective application.

Internal parameters to be established during design or construction for a sub-system comprised of sub-system elements:

- T_2: Diagnostic test interval
- β: Susceptibility to common cause failure
- DC: Diagnostic Coverage
- PFH_D: The PFH_D value of the safety-related control system is calculated by adding the sub-systems' individual PFH_D values.

Users have the following options when designing a safety-related control system:

- Use devices and sub-systems that already comply with EN 954-1 and IEC 61508 or EN 62061. The standard specifies how to incorporate qualified devices when implementing safety functions.
- Develop their own sub-systems.
  - Apply IEC 61508 for programmable, electronic sub-systems or complex sub-system.
  - Apply EN62061 for simple devices and sub-systems.

The standard represents a comprehensive system for the implementation of safety-related electrical, electronic and programmable electronic control systems. EN 62061 has been harmonized standard since December 2005.

SIX STEPS TOWARDS A SAFE MACHINE

STEP 1
Risk assesment in accordance with EN 1050 / EN 14121

STEP 2
Define the measures required to reduce the calculated risks

STEP 3
Risk reduction through control measures

STEP 4
Implementation of control measures using EN ISO 13849-1

Implementation of control measures using EN 62061

STEP 5
Verification of the measures

STEP 6
Validation of the measures

For further information please refer to the next pages...

MACHINE DIRECTIVE AND EUROPEAN STANDARDS

Basic procedure to achieve safety step-by-step

Step 1 – Risk assessment in accordance with EN 1050 / EN ISO 14121

Sooner or later, a hazard on a machine will result in harm to a person if no safety measures are put in place. Safety measures are a combination of these measures taken by the designer and those implemented by the user. Measures taken at the design phase are preferable to those implemented by the user, and generally they are also more effective.

Approach during the machine design

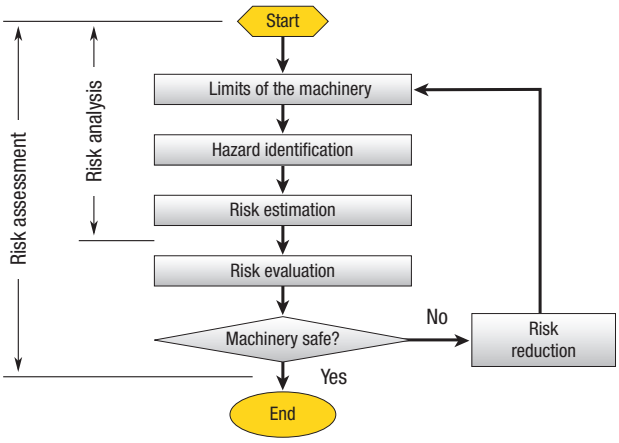

EN1050 and EN ISO 14121

The designer must follow the sequence described below, bearing in mind the experience gained by users of similar machinery and information gained from discussions with potential users (if this is possible):

- Establish the limits and the intended use of the machinery;
- Identify the hazards and any associated hazardous situations;
- Estimate the risk for each identified hazard and hazardous situation;
- Evaluate the risk and decide on the need for risk reduction.

Step 2 – Define the measures required to reduce the calculated risks

The objective is to reduce risk as much as possible, taking various factors into account. The process is iterative; making the best possible use of the available technologies where it may be necessary to repeat the process several times in order to reduce the risk.

When carrying out the process, the following priority ranking shall apply:

1. Safety of the machine in all phases of its lifetime;
2. The ability of the machine to perform its function;
3. User friendliness of the machine.

Only then shall the machine's manufacturing, operating and disassembly costs be taken into consideration.

The hazard analysis and risk reduction process requires hazards to be eliminated or reduced through a hierarchy of measures:

1. Hazard elimination or risk reduction through design
2. Risk reduction through technical protection devices and potential additional protective measures
3. Risk reduction through the availability of user information about residual risk.

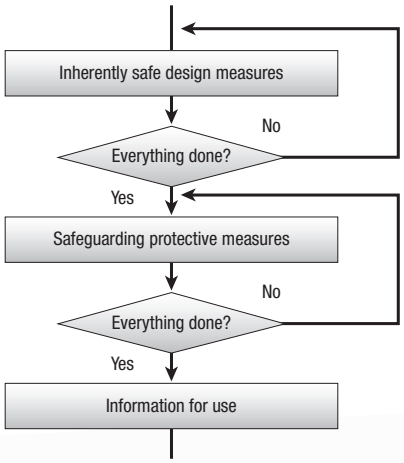

Step 3 – Risk reduction through control measures

If safety-related control parts are used to control a protective measure in order to achieve the necessary risk reduction, the design of these control parts shall be an integral part of the whole design procedure for the machine. The safety-related control system provides the safety function(s) with a Category, Safety integrity level (SIL) or Performance Level (PL) that achieves the necessary risk reduction.

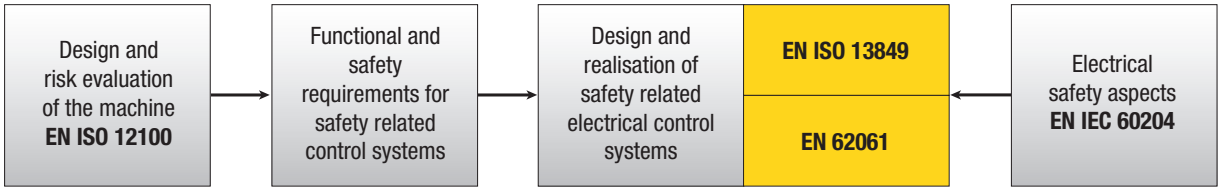

Step 4 – Implementation of control measures using EN ISO 13849-1 or EN 62061

Step 4.1: Determination of the required performance level

This determination needs to be done independent if conformity according to EN ISO 13849-1 of EN 62061 is needed. Both standards refer to the severity of the injury, the frequency or exposure time to the hazard and the possibility to avoid the dangerous condition.

EN ISO 13849:

Determination of the required performance level (PL)

S - Severity of injury
S_1 - Slight (reversible injury)
S_2 - Serious (normally irrereversible injury including death)

F - Frequency and/or exposure to a hazard
F_1 - Seldom to less often and/or the exposure time is short
F_2 - Frequent to continuous and/or the exposure time is long

P - Possibilities of avoiding the hazard or limiting the harm
P_1 - Possible under specific conditions
P_2 - Scarcely possible

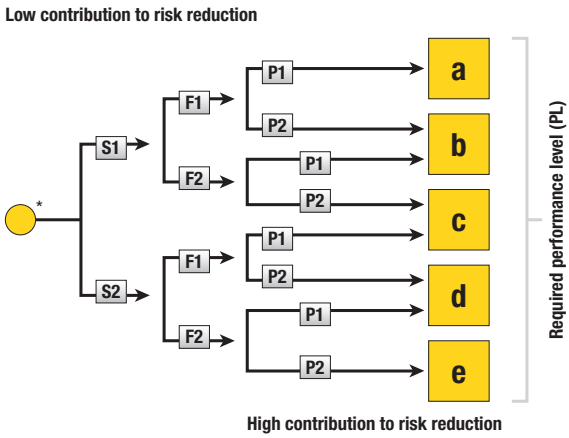

* Starting point for evaluation of safety functions contrbition to risk reduction.

EN 62061:

For a more detailed view on how to determine the performance level and the required safety integrity level, please refer to the calculations shown in the standards.

Risk assessment and definition of the required safety

Consequences and severity	Se	Frequenzy and duration	Fr	Probability of hazardous event	Pr	Avoidance	Av	Class CI 3-4	5-7	8-10	11-13	14-15
Death, losing an eye or arm	4	< 1 hour	5	Very high	5			SIL 2	SIL 2	SIL 2	SIL 3	SIL 3
Permanent losing fingers	3	> 1 hour - ≤ 1 day	5	Likely	4				OM	SIL 1	SIL 2	SIL 3
Reversible, medical attention	2	> 1 day - ≤ 2 weeks	4	Possible	3	Impossible	5			OM	SIL 1	SIL 2
Reversible, first aid	1	> 2 weeks - ≤ 1 year	3	Rarely	2	Possible	3				OM	SIL 1
		> 1 year	2	Negligible	1	Likely	1					

OM = other measures required

Step 4.2: Specification

The specification of the functional requirements shall describe each safety function that is to be performed. Any interfaces with other control functions shall be defined and any necessary error reactions established. The required SIL or PL must be defined.

Step 4.3: Design of the control architecture

Part of the risk reduction process involves the definition of the machine‘s safety functions. This includes the safety functions on the control system, e.g. to prevent unexpected start-up. When defining the safety functions it is always important to consider that a machine has different operating modes (e.g. automatic & setup mode) and that the safety measures in these different modes may be totally different (e.g. safely limited speed in setup mode <-> two-hand in automatic mode). A safety function may be implemented via one or more safety related control parts and several safety functions may be divided over one or more safety-related control parts (e.g. logic module, energy transmission element(s)).

Step 4.4: Determination of the achieved performance level of the safety system

EN ISO 13849-1:

The PL shall be estimated for each selected SRP/CS and/or combination of SRP/CS that performs a safety function.

The PL of the SRP/CS shall be determined by the estimation of the following parameters:

- the $MTTF_d$ value for single components
- the DC
- the CCF
- the structure (category)
- the behaviour of the safety function under fault condition(s)
- safety-related software
- systematic failures
- the ability to perform a safety function under expected environmental conditions

EN 62061:

The selection or design of the SRECS shall always meet the following minimum requirements:

Requirements for hardware safety integrity, comprising

- Architectural constraints for hardware safety integrity
- Requirements for the probability of dangerous random hardware failures plus requirements for systematic safety integrity, comprising
  - Requirements for avoidance of failures and
  - Requirements for the control of systematic failures

EN 62061 also describes requirements for implementing application programs.

Safety-related parameters for sub-systems:

- SIL_{CL}: SIL claim limit
- PFH_D: Probability of dangerous failure per hour
- T_1: Lifetime

Safety-related parameters for subsystem elements (devices):

- λ: Failure rate
- B_{10}: for wearing elements
- T_1: Life time
- T_2: Diagnostic test interval
- β: Susceptibility to common cause failure
- DC: Diagnostic coverage
- SFF: Safe failure fraction
- HFT: Hardware fault tolerance

Step 5 – Verification

After setting up the safety system, a cross check between the required “safety levels” and finally reached “safety levels” is mandatory. The realized system has to fulfill at least the minimum requirements specified during the risk assessment.

EN ISO 13849-1:

For each individual safety function, the PL of the corresponding SRP/CS must match the “Required Performance Level”. Where various SRP/CS form part of a safety function, their PLs shall be equal to or greater than the performance level required for this function.

EN 62061:

The probability of dangerous failure of each safety-related control function (SRCF) as a result of dangerous random hardware failures shall be equal to or less than the failure threshold value defined in the specification of the safety requirements.

The SIL that is achieved by the SRECS on the basis of architectural constraints shall be less than or equal to the lowest SIL_{CL} of any sub-system involved in performing the safety function.

Step 6 – Validation

The design of a safety-related control function shall be validated. The validation must show that the combination for each safety function of the safety-related parts meets the relevant requirements.

The results of the validation need to be documented in detail because they show what the machine builder considered during risk analysis and implementation of the safety measures. Additionally the documentation should show a clear test plan and how it was carried out.

Conclusion:

Independent of which standard is used to declare conformity to machine directive – the steps to take in the process are quite similar. If you have open questions regarding this whole process, please contact your Omron representative or one of our specialized Omron Safety Partners.

PERFORMANCE LEVEL CALCULATION

Implementation of control measures using EN ISO 13849-1

This chapter shows a short summary of the EN ISO 13849-1 content. To claim conformity according EN ISO 13849-1 please read this standard carefully. For further information or support, please contact your local Omron partner or the Omron Safety Service Network.

The approach according to EN ISO 13849-1 is quite similar to the approach that is known from EN 954-1. The first step is the determination of the required performance level. EN ISO 13849-1 shows a risk graph that helps evaluate the level of risk for each individual hazard in the machine. Of course it is possible to use other methods for risk evaluation as well.

Determination of the required performance level (PL)

S - Severity of injury
S_1 - Slight (reversible injury)
S_2 - Serious (normally irrereversible injury including death)

F - Frequency and/or exposure to a hazard
F_1 - Seldom to less often and/or the exposure time is short
F_2 - Frequent to continuous and/or the exposure time is long

P - Possibilities of avoiding the hazard or limiting the harm
P_1 - Possible under specific conditions
P_2 - Scarcely possible

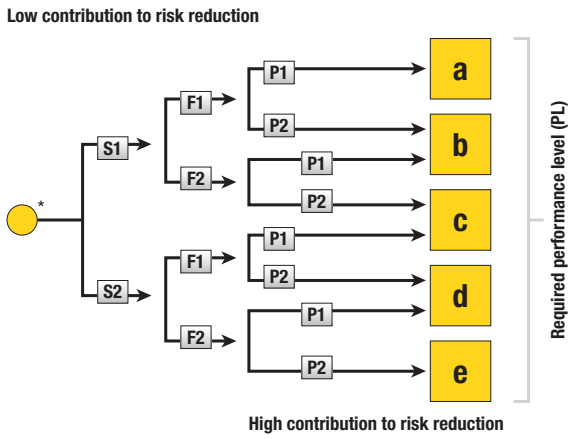

* Starting point for evaluation of safety functions contrbition to risk reduction.

Components and Subsystems

Knowing the required performance level (PL_r), it is possible to design the safety function, which is built on several parameters:

1) Hardware structure formed into categories (B, 1, 2, 3 and 4)
2) Reliability data of the system or components ($MTTF_d$)
3) System reliability, diagnostic coverage (DC_{avg})
4) Design integrity (CCF)

Additionally, the installation of a proper quality management system is a basic requirement to the management.

1) Hardware structure (Safety category)

Every safety system is built of three subsystems: input, logic and output. The way this hardware is designed describes the architecture of the safety system. In the end, the hardware structure is the successor of the known safety categories from EN954-1.

Single channel hardware structure:

This hardware structure uses only one channel to stop the dangerous movement of the machine. This structure is known from category B and category 1 acc. EN954-1. The main difference between category B and 1 is the reliability of the used components. In category 1, well proven safety principles like well tried components are used to reduce the risk of loosing the safety function. A single fault in the system may result in the loss of the safety function.

Dual channel hardware structure:

Most of the machine safety systems are based on dual channel hardware structure. This structure can be build of:

a) a single channel system + test system (category 2)

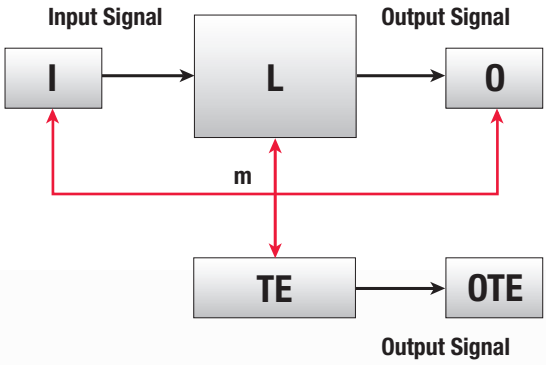

This example shows a category 2 system with two separate outputs. The Test equipment (TE) monitors (m) the correct function of the Input, Logic and Output. If the test results are ok, the test output (OTE) is activated. A failure in the safety system can be detected by the Test equipment and will not result in a loss of the safety function since the shutdown still can be done via the second channel.

b) two similar channels (category 3)

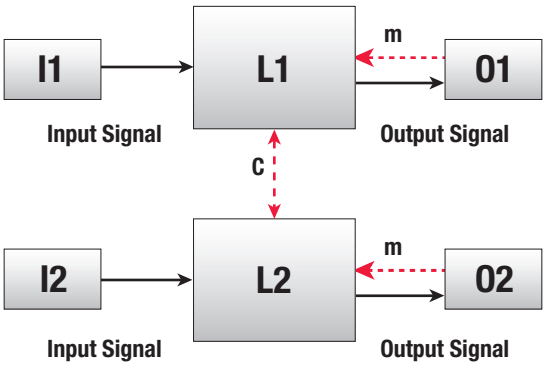

A category 3 safety system is build of two channels, which can be done homogenous (same technology in both channels) or divers (different technology in both channels, e.g. electronics in channel 1 and electromechanics in channel 2). Some Category 3 systems require monitoring (m) of the outputs or cross monitoring (C) of the logic system, depending on the individual design. A failure in one channel does not lead to a loss of the safety function. Accumulation of failures is not covered by a category 3 system.

c) two similar channels + test system (category 4)

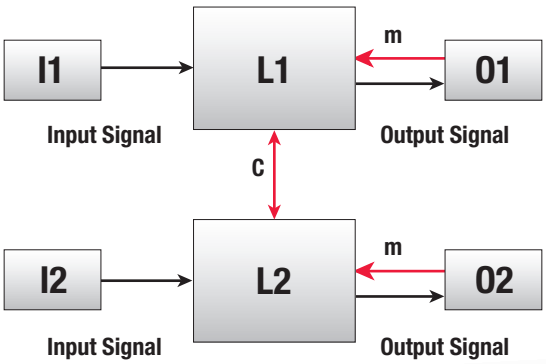

Category 4 systems use two channels as well (homogenous or divers). Monitoring (m) and cross-monitoring (C) is used to detect multiple failures in the system without loosing the safety function.

2) Reliability of the system or individual components (MTTFd)

There are two things that are important for safety systems. They have to be safe and reliable. Reliability is directly linked to productivity and therefore important since each and every unnecessary shutdown due to a failure of the system or one component stops production and will increase the risk of manipulation. System failures happen more frequently in the beginning and close to the end of the lifetime of a system or an individual component.

a) Mechanical, electromechanical, pneumatic and hydraulic systems

Failure of these components is linked to the lifetime and/or the number of operations. A common way to test and to describe the behavior is to do a lifetime test until 10% of the units under test fail. This is called B_{10}. For safety, the test is more specific and B_{10d} shows the value until 10% of the units in test fail to the dangerous side. Typical components that come with a B_{10d} value are safety limit switches, safety door switches and safety relays.

b) Electronic systems

In electronic systems, the failure rate is a probabilistic value that is calculated by using the individual data of all components in use since there is a FIT value (failures in time) for all kinds of components.

$MTTF_d$ classification			
Low	3 years <=	$MTTF_d$	< 10 years
Medium	10 years <=	$MTTF_d$	< 30 years
High	30 years <=	$MTTF_d$	< 100 years

For electronic systems (b), $MTTF_d$ is part of the documentation and supplied by the manufacturer.

For mechanical, electromechanical, pneumatic and hydraulic systems (a) $MTTF_d$ can be calculated by the parameter B_{10d} that is also part of the documentation and the number of operations per year n_a according to:

$$MTTF_d \quad \frac{B_{10d}}{0{,}1 \times n_a}$$

3) System reliability, diagnostic coverage (DC_{avg})

EN ISO 13849-1 describes four levels how the safety system is tested internally.

System reliability			
None		DC_{avg}	< 60%
Low	60% <=	DC_{avg}	< 90%
Medium	90% <=	DC_{avg}	< 99%
High	99% <=	DC_{avg}	

The quality of the tests in the system is a measure how failures are detected. The better the system is tested, the higher is the level of safety. This method is applicable instead of a detailed FMEA acc. EN ISO 13849-1.

4) Design integrity and common cause failures (CCF)

External impacts like overvoltage or high temperature may damage a safety system even if it consists of two channels. This impact influences both channels in the same way since there is one common cause that makes both channels fail.

EN ISO 13849-1 uses a point system to check if the minimum requirements are met by the system. The minimum number of points is 65 out of 100:

Requirements		Maximum
Separation	Separation of signals, Isolation etc.	15 Points
Diversity	Different technologies or components	20 Points
Design, Application, Experience	Overload, overvoltage or protection	15 Points
	Use of well proven components or technologies	5 Points
Analysis	Failure analysis is used to avoid common cause failures	5 Points
Competence, Training	Training of designers to understand CCF and learn how to avoid	5 Points
Environment	EMC Test	25 Points
	Shock, vibration or temperature test	10 Points
Training	and learn how to avoid	
Environment	EMC Test	25 Points
	Shock, vibration or temperature test	10 Points

Performance level of a subsystem

EN ISO 13849-1 summarizes all this information in one graph

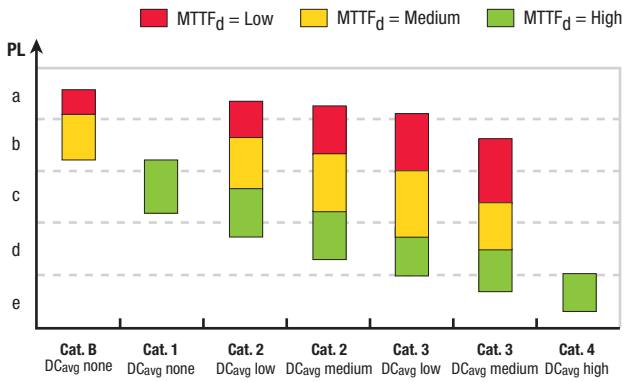

How to read this graph for a PL = d system:

Option 1: Cat.2 system with $MTTF_d$ = high and DC = medium

Option 2: Cat. 3 system with $MTTF_d$ = medium and DC = medium

Of course there are other options possible as well according to this graph.

Setting up a safety system

EN ISO 13849-1 describes a simple process to combine subsystems if the PL for all the subsystems is known.

1. Determine the subsystem with the weakest PL (PL low).
2. Determine the number of subsystems (n low) with PL low.

PL low	n low		PL
Weakest PL of the subsystems	Number of subsystems with PL low		Maximum PL that can be achieved
a	>3	➜	-
	<=3	➜	a
b	>2	➜	a
	<=2	➜	b
c	>2	➜	b
	<=2	➜	c
d	>3	➜	c
	<=3	➜	d
e	>3	➜	d
	<=3	➜	e

Example

Risk analysis showed a required performance level PL_r = e for a safety system. The system in use to solve this is shown below:

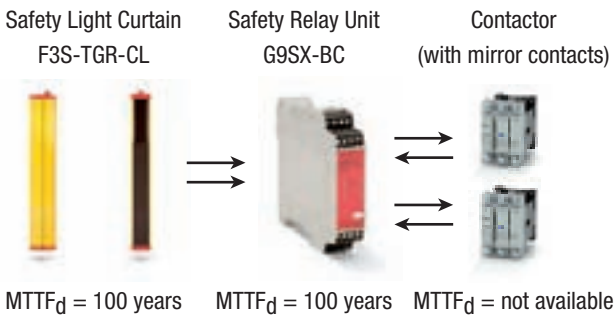

In this example, $MTTF_d$ is known for F3S-TGR-CL and G9SX-BC. The two contactors are part of the output system, where G9SX-BC is used for test purposes (relay monitoring of the mirror contacts). For the contactors, a subsystem is defined and the calculation of $MTTF_d$ is done as shown:

Step 1: Define Subsystem Output

The subsystem output includes the G9SX-BC and the two contactors. Each of the G9SX-BC outputs drives one contactor. Each contactor is equipped with mirror contacts. The feedback signal of the mirror contacts is checked by the G9SX-BC.

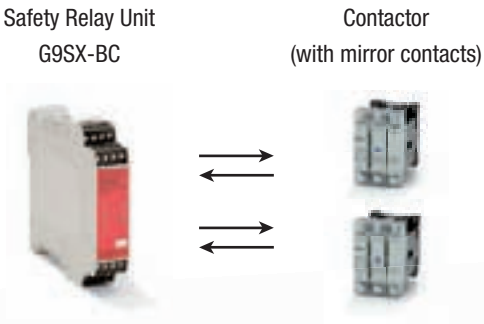

Step 2: Hardware architecture of the subsystem output:

Safety relay unit G9SX-BC is a two channel system (L1 and L2) using cross-checking (c). O1 and O2 are the two contactors. So the hardware structure is able to fulfill the requirements of a category 3 or category 4.

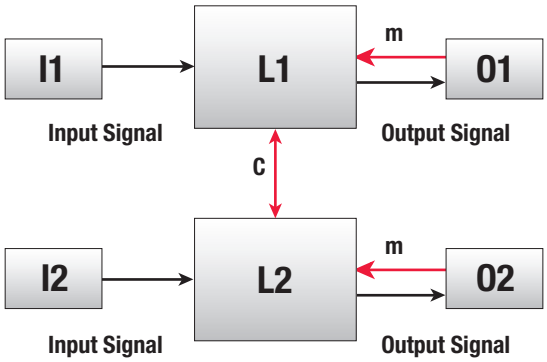

Step 3: Calculation of subsystem $MTTF_d$

Calculation of the MTTFd per channel (calculation is needed only once since the two contactors are operated in the same way):

$$MTTF_d \quad \frac{B_{10d}}{0{,}1 \times n_a}$$

where:

$B10_d$ of the Contactor = 1500000

Cycle time (t) = 30 min (assumption)

Daily operation hours (h) = 14 hours/day

Yearly operation days (d) = 220 days/year

$$n_a = \frac{d \times h \times 60\ min/h}{t} = \frac{220\ day/year \times 14\ h/day \times 60\ min/h}{30\ min/cycle} = 6160\ cycles/year$$

$$MTTF_d = \frac{1500000}{0{,}1 \times 6160} = 2435\ years$$

A $MTTF_d$ of 2435 years is "high" according to EN ISO 13849-1.

Step 4: Check diagnostic coverage

DC can be assumed high acc. EN ISO 13849-1 since the feedback monitoring of the forcibly guided contacts allow precise testing and diagnosis.

Step 5: Verify Design Integrity of the Subsystem

For Design integrity (CCF), we can select:

- Separation	15 points
- Design and Development	20 points
- Competence and training	5 points
- Environment	35 points

This results in 75 points for the output subsystem.

Step 6 Performance level of the subsystem

As result, the graph now can be used to find the PL for the subsystem:

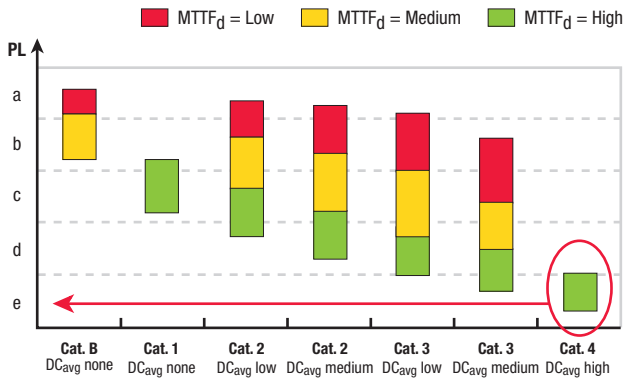

Step 7: Calculation of the complete system (values are just for calculation and do not represent real data):

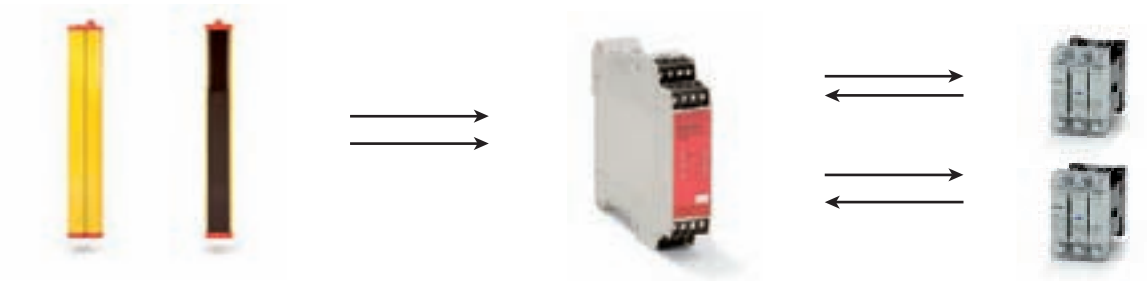

Safety Light Curtain F3S-TGR-CL
$MTTF_d$ = 100 years
Category 4
DC_{avg} = 99%

Safety Relay Unit G9SX-BC
$MTTF_d$ = 100 years
Category 4
DC_{avg} = 99%

Contactor (with mirror contacts)
$MTTF_d$ = 2435 years
Category 4
DC_{avg} = 99%

Step 8: Calculation of the total $MTTF_d$:

$$MTTF_d = \frac{1}{\sum_{i=1}^{3} \frac{1}{MTTF_{di}}} = \frac{1}{\frac{1}{100} + \frac{1}{100} + \frac{1}{2435}} = \frac{1}{0{,}0201} = 48{,}99 \text{ years}$$

Step 9: Calculation of the total DC_{avg}:

$$DC_{avg} = \frac{\sum_{i=1}^{2} \frac{DC_i}{MTTF_{di}}}{\sum_{i=1}^{2} \frac{1}{MTTF_{di}}} = \frac{\frac{0{,}99}{100} + \frac{0{,}99}{2435}}{\frac{1}{100} + \frac{1}{2435}} = 0{,}99$$

Step 10: Check results

Hardware structure:

F3S-TGR-CL and G9SX-BC use an internal hardware structure acc. category 4, the subsystem output is suitable for category 4 as well.
A $MTTF_d$ of 48,99 years is considered as "high" acc. EN ISO 13849-1. and a DC of 0,99 is considered "high" as well.
In the end, the total system fulfills the requirements of a PL = e system, so all requirements regarding the performance level of the safety system are met.

Further information and tools

Further information is available from your Omron partner or the local notified bodies working in machine safety.

Omron supports the calculation tool “SISTEMA” that is provided by IFA/DGUV in Germany. For further information, please refer to www.omron-industrial.com/safety.

CONTROL AND SIGNALLING DEVICES

Interact with your machine

Machines that are stopped during production are creating extra cost, our signal towers are used to show this status and guide workers to service the machines efficiently, minimizing downtime and production loss.

Signalling devices

Signal Towers

LU5	see page 41

- Modular system
- 50 mm diameter
- LED technology
- Sound system
- IP 65

Monolithic system
30 mm

MP/MPS

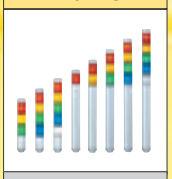

page 48

Monolithic system
60 mm

LME

page 50

Modular system
70 mm

LU7

page 45

SAFE CONTROL SYSTEMS FOR CONTROL AND SIGNALLING DEVICES

Safety Relay Units		Flexible Safety Units	Safety Controllers		Safety Sensors
					
G9SB	G9SA	G9SX	G9SP	NEA1	F3S-TGR-CL
see page 90	see page 91	see page 96	see page 100	see page 102	see page 79

Control devices

Standard- and E-Stop pushbutton switches family

- 16 mm mounting diameter
- Wide range of switching capacity
- Short mounting depth
- High protection class IP65
- UL, CSA and VDE approved
- Conforms to EN60947-5-1 and IEC 947-5-1

Standard pushbutton

A16

page 32

E-Stop pushbutton

A165E

page 34

- 22 mm mounting diameter
- Wide range of switching capacity
- Modular design for flexibility in application
- High protection class IP65
- UL, CSA and VDE approved
- Conforms to EN60947-5-1 and IEC 947-5-1

Standard pushbutton

A22 Series

page 35

E-Stop pushbutton

A22E

page 37

Rope pull E-Stop switches

ER series Rope pull Switches	see page 38

- Long rope span
- Tension indicator
- Robust housing
- Stainless steel housing available
- Explosion proof housing available

40 m rope span

ER5018

page 38

80 m rope span

ER6022

page 38

125 m rope span

ER1022

page 38

200 m rope span

ER1032

page 38

16 mm pushbutton switch

These sub-assembled pushbutton switches have a modular construction: pushbutton + case + lamp (if applicable) + switch. A16 is a nut-mounted pushbutton switch with a short mounting depth of less than 28.5mm below panel.

- Wide variety of control and signal devices: lighted, non-lighted and buzzer
- Quick and easy assembly, snap-in switch
- Wide range of switching capacity from standard load to micro load
- High reliability, IP65
- UL, cUL, CSA and VDE approved, conforms to EN60947-5-1 and IEC947-5-1

Ordering information

Type	Colour	Order code		
		Degree of protection: Oil-resistant IP65		
		Rectangular	Square	Round
Non-lighted LED Incandescent lamp	Red	A165L-JR	A165L-AR	A165L-TR
	Yellow	A165L-JY	A165L-AY	A165L-TY
	Pure yellow	A165L-JPY	A165L-APY	A165L-TPY
	White	A165L-JW	A165L-AW	A165L-TW
	Blue	A165L-JA	A165L-AA	A165L-TA
Non-lighted	Black	A165L-JB	A165L-AB	A165L-TB
LED	Green	A165L-TGY	A165L-AGY	A165L-TGY
Non-lighted/incandescent lamp	Green	A165L-JG	A165L-AG	A165L-TG

Cases

Appearance	Classification		Order code
			Oil-resistant IP65
	Momentary operation	Rectangular (2-way guard)	A165-CJM
		Square	A165-CAM
		Round	A165-CTM
	Alternate operation	Rectangular (2-way guard)	A165-CJA
		Square	A165-CAA
		Round	A165-CTA

Switches

Appearance	Classification				Order code
	Lighted/ non-lighted (common use)	Standard load/ microload (common use)	SPDT	Solder terminal	A16-1
			DPDT		A16-2
			SPDT	PCB terminal	A16-1P
			DPDT		A16-2P
			DPDT	Screw-less clamp	A16-2S

Switches with reduced voltage lighting

Appearance	Classification				Order code
	100 V	Standard load/ microload (common use)	SPDT	Solder terminal	A16-T1-1
			DPDT		A16-T1-2
	100 V		DPDT	Screw-less clamp	A16-T1-2S
	200 V				A16-T2-2S

Lamps

Type	Colour	Order code		
		5 VDC	12 VDC	24 VDC
LED	Red	A16-5DSR	A16-12DSR	A16-24DSR
	Yellow	A16-5DSY	A16-12DSY	A16-24DSY
	Green	A16-5DSG	A16-12DSG	A16-24DSG
	White *1	A16-5DSW	A16-12DSW	A16-24DSW
	Blue	**A16-5DA**	A16-12DA	A16-24DA
Type		**5 VAC/VDC**	**12 VAC/VDC**	**24 VAC/VDC**
Incandescent lamp		A16-5	A16-12	A16-24

*1 Use the white LED together with white or pure yellow pushbuttons.

Accessories

Name	Appearance	Classification	Remarks	Order code
Switch guards		For rectangular models	Cannot be used with the dust cover	A16ZJ-5050
		For square and round models		A16ZA-5050
Dust covers		For rectangular models	Cannot be used with the switch guard	A16ZJ-5060
		For square models		A16ZA-5060
		For round models		A16ZT-5060
Panel plugs		For rectangular models	Used for covering the panel cutouts for future panel expansion	A16ZJ-3003
		For square models		A16ZA-3003
		For round models		A16ZT-3003

Specifications

Allowable operating frequency	**Mechanical**	Momentary operation: 120 operations/minute max. Alternate operation: 60 operations/minute max.
	Electrical	20 operations/minute max.
Durability	**Mechanical**	Momentary operation: 2,000,000 operations min. Alternate operation: 200,000 operations min.
	Electrical	100,000 operations min.
Ambient temperature		Operating: -10 to 55°C (with no icing or condensation) Storage: -25 to 65°C (with no icing or condensation)
Weight		Approx. 10 g (in the case of a lighted DPDT switch with solder terminals)
Size in mm (HxWxD)		Round/square: 18x18x28.5 rectangular: 18x24x28.5

Operating characteristics	**Pushbutton switch**	
	Oil-resistant IP65	
	SPDT	**DPDT**
Operating force (OF) max.	2.94 N	4.91 N
Releasing force (RF) min.	0.29 N	
Total travel (TT)	Approx. 3 mm	
Pretravel (PT) max.	2.5 mm	
Lock stroke (LTA) min.	0.5 mm	

Item		**Screw-less clamp**			
Recommended wire size		0.5 mm^2 twisted wire or 0.8 mm dia. solid wire			
Usable wires and tensile strength	Twisted wire	0.3 mm^2	0.5 mm^2	0.75 mm^2	1.25 mm^2
	Solid wire	0.5 mm dia.	0.8 mm dia.	1.0 mm dia.	
	Tensile strength	10 N	20 N	30 N	40 N
Length of exposed wire		10 ±1 mm			

Emergency stop switch

The A165E line-up offers E-Stop switches with various head types. For flexible application, a wide range of accessories is provided. To set up easy installation and maintenance, various contact combinations are available.

- Direct opening mechanism with minimum contact separation of 3 mm
- Safety lock mechanism prevents misuse
- Short mounting depth
- Modular construction; easy installation using snap-in switch

Ordering information

Switches	Rated voltage	Pushbutton color	Pushbutton size	Terminal	Contact	Order code Standard load (125 VAC at 5 A, 250 VAC at 3 A, 30 VDC at 3 A)
LED	24 VDC	Red	30 dia.	Solder terminal	SPST-NC	A165E-LS-24D-01
					DPST-NC	A165E-LS-24D-02
None	–				SPST-NC	A165E-S-01
					DPST-NC	A165E-S-02
					TPST-NC	A165E-S-03U
LED	24 VDC		40 dia.		SPST-NC	A165E-LM-24D-01
					DPST-NC	A165E-LM-24D-02
None	–				SPST-NC	A165E-M-01
					DPST-NC	A165E-M-02
					TPST-NC	A165E-M-03U

Note: The above models have a surface indication of “RESET.” Models with “STOP” indication are also available. For further information, contact your Omron representative.

Accessories (order separately)

Item	Type	Precautions	Order code
Yellow plate	Yellow, 45 dia.	Use this as an emergency stop nameplate.	A16Z-5070
Panel plug	Round	Used for covering the panel cutouts for future panel expansion.	A16ZT-3003
Tightening tool	–	Useful for repetitive mounting. Be careful not to tighten excessively.	A16Z-3004
Extractor	–	Convenient for extracting the switch and lamp.	A16Z-5080

Specifications

Rated voltage	Resistive load	
	A165E series	A165E_-U series
125 VAC	5 A	1 A
250 VAC	3 A	0.5 A
30 VDC	3 A	1 A
Minimum applicable load	150 mA at 5 VDC	1 mA at 5 VDC

Features	Characteristics
Operating force (OF) max.	14.7 N
Releasing force (RF) min.	0.1 N·m
Pretravel (PT)	3.5±0.5 mm (3±0.5 mm In case of A165E_U series)

Item		Emergency stop switch
Allowable operating frequency	Mechanical	20 operations/minute max.
	Electrical	10 operations/minute max.
Insulation resistance		100 MΩ min. (at 500 VDC)
Dielectric strength		1,000 VAC, 50/60 Hz for 1 min between terminals of same polarity 2,000 VAC, 50/60 Hz for 1 min between terminals of different polarity and also between each terminal and ground 1,000 VAC, 50/60 Hz for 1 min between lamp terminals *1
Durability	Mechanical	100,000 operations min.
	Electrical	100,000 operations min.
Ambient temperature		Operating: -10 to 55°C (with no icing or condensation) Storage: -25 to 65°C (with no icing or condensation)
Protection against electric shock		Class II

*1 LED not mounted. Test them with the LED removed.

22 mm pushbutton switch

A22 comes in a wide variety of shapes and colours and is installable in 22-dia. or 25-dia. panel cutouts. The switch unit can easily be mounted. A22 is mounted using either open-type (fork-type) or closed-type (round-type) crimp terminals.

- Finger-protection mechanism on switch unit provided as standard feature
- Increased wiring efficiency with three-row mounting of switch blocks
- IP65 oil-resistant (non-lighted models), IP65 (lighted models)
- Lighted and non-lighted, flat, projection and half- and full-guard versions
- EN60947-5-1, UL and cUL approved

Ordering information

Pushbutton

Illumination	Colour	Order code							
		Flat type	Projection type	Full-guard type	Half-guard type	Square/ projection type	Square/ full-guard type	Round/ mushroom type (30-dia. head)	Round/ mushroom type (40-dia. head)
									
Non-lighted	Red	A22-FR	A22-TR	A22-GR	A22-HR	A22-CR	A22-DR	A22-SR	A22-MR
	Green	A22-FG	A22-TG	A22-TG	A22-HG	A22-CG	A22-DG	A22-SG	A22-MG
	Yellow	A22-FY	A22-TY	A22-GY	A22-HY	A22-CY	A22-DY	A22-SY	A22-MY
	White	A22-FW	A22-TW	A22-GW	A22-HW	A22-CW	A22-DW	A22-SW	A22-MW
	Blue	A22-FA	A22-TA	A22-GA	A22-HA	A22-CA	A22-DA	A22-SA	A22-MA
	Black	A22-FB	A22-TB	A22-GB	A22-HB	A22-CB	A22-DB	A22-SB	A22-MB
Lighted	Red	–	A22L-TR	A22L-GR	A22L-HR	A22L-CR	A22L-DR	–	–
	Green	–	A22L-TG	A22L-GG	A22L-HG	A22L-CG	A22L-DG	–	–
	Yellow	–	A22L-TY	A22L-GY	A22L-HY	A22L-CY	A22L-DY	–	–
	White	–	A22L-TW	A22L-GW	A22L-HW	A22L-CW	A22L-DW	–	–
	Blue	–	A22L-TA	A22L-GA	A22L-HA	A22L-CA	A22L-DA	–	–
Buttonsize in mm		29.7 dia. x 12D	29.7 dia. x 19D	29.7 dia. x 19D	29.7 dia. x 12/18.5D	29.8 mm^2 x 18D	29.8 mm^2 x 18D	30 dia. x 32D	40 dia. x 32D

Switches

Switch operation	Contacts	Oder code			
		Non-lighted models	Lighted models		
		Without voltage reduction unit		With voltage reduction unit	
				110 VAC	220 VAC
					
Momentary	SPST-NO	A22-10M	A22L-10M	A22L-10M-T1	A22L-10M-T2
	SPST-NC	A22-01M	A22L-01M	A22L-01M-T1	A22L-01M-T2
	SPST-NO + SPST-NC	A22-11M	A22L-11M	A22L-11M-T1	A22L-11M-T2
	DPST-NO	A22-20M	A22L-20M	A22L-20M-T1	A22L-20M-T2
	DPST-NC	A22-02M	A22L-02M	A22L-02M-T1	A22L-02M-T2
Alternate	SPST-NO	A22-10A	A22L-10A	A22L-10A-T1	A22L-10A-T2
	SPST-NC	A22-01A	A22L-01A	A22L-01A-T1	A22L-01A-T2
	SPST-NO + SPST-NC	A22-11A	A22L-11A	A22L-11A-T1	A22L-11A-T2
	DPST-NO	A22-20A	A22L-20A	A22L-20A-T1	A22L-20A-T2
	DPST-NC	A22-02A	A22L-02A	A22L-02A-T1	A22L-02A-T2

Switch blocks

	Standard load	Order code
Switch blocks	SPST-NO	A22-10
	SPST-NC	A22-01
	DPST-NO	A22-20
	DPST-NC	A22-02

Lamp – LED

AC/DC	LED light	Order code			
		Operating voltage			
		6 V	12 V	24 V	24 V superbright
DC	Red	A22-6DR	–	–	–
	Green	A22-6DG	–	–	–
	Yellow *1	A22-6DY	–	–	–
	Blue	A22-6DA	–	–	–
AC	Red	A22-6AR	–	–	–
	Green	A22-6AG	–	–	–
	Yellow *1	A22-6AY	–	–	–
	Blue	A22-6AA	–	–	–
AC and DC	Red	–	A22-12AR	A22-24AR	A22-24ASR
	Green	–	A22-12AG	A22-24AG	A22-24ASG
	Yellow *1	–	A22-12AY	A22-24AY	A22-24ASY
	Blue	–	A22-12AA	A22-24AA	A22-24ASA

*1 Used when the pushbutton colour is yellow or white

Lamp - incandescent lamp

Order code		
Operating voltage		
5 VAC/VDC	12 VAC/VDC	24 VAC/VDC
A22-5	A22-12	A22-24

Accessories

Item				Remarks	Order code
Lamp sockets	Direct lighting			Used when changing the lighting method (LED only)	A22-TN
	Voltage-reduction lighting		220 VAC		A22-T2
Mounting latches	For momentary models			Order mounting latches only when mounting switch blocks or lamp sockets are purchased individually	A22-3200
Legend plate frames	Large size	With snap-in legend plate, without text, black		Snap-in legend plate is acrylic	A22Z-3333
		Without snap-in legend plate			A22Z-3330
Sealing caps	For projection models			Used to prevent dust or water from entering the operation unit (pushbutton, etc.), colour: Opaque, material: Silicon	A22Z-3600T
Three-throw spacer				Used when mounting three non-lighted switches	A22Z-3003
Control boxes (enclosures)	Exclusively for A22		One hole	Do not use DPST-NO or DPST-NC switches, material: Polycarbonate resin	A22Z-B101
			Two holes		A22Z-B102
			Three holes		A22Z-B103
Snap-in legend plates	Standard size	Without text	White	Attached to the standard-size legend plate frame, material: Acrylic	A22Z-3443W
			Transparent		A22Z-3443C
		White text on black background	ON		A22Z-3443B-5
			OFF		A22Z-3443B-6
			DOWN		A22Z-3443B-8
			POWER ON		A22Z-3443B-9
	Large size	Without text	White	Attached to the large-size legend plate frame, material: Acrylic	A22Z-3453W
			Transparent		A22Z-3453C
	For emergency stop switch	60-dia. round plate with black letters on a yellow background		"EMERGENCY STOP" is engraved on the plate. Used as an emergency stop switch legend plate	A22Z-3466-1
		90-dia. round plate with black letters on a yellow background			A22Z-3476-1
Lamp extractor				Rubber tool used to easily replace lamps	A22Z-3901
Tightening wrench				Tool used to tighten nuts from the back of the panel	A22Z-3905

Specifications

Recognized organization	Standards	File number
UL, cUL	UL508	E41515
–	EN60947-5-1	–

Contact ratings (standard load)

Rated carry current (A)	Rated voltage	Rated current (A)			
		AC15 (inductive load)	AC12 (resistive load)	DC13 (inductive load)	DC12 (resistive load)
10	24 VAC	10	10	–	–
	110 VAC	5	10	–	–
	220 VAC	3	6	–	–
	380 VAC	2	3	–	–
	440 VAC	1	2	–	–
	24 VDC	–	–	1,5	10
	110 VDC	–	–	0,5	2
	220 VDC	–	–	0,2	0,6
	380 VDC	–	–	0,1	0,2

Contacts (microload)

Rated applicable load	Minimum applicable load
50 mA at 5 VDC (resistive load)	1 mA at 5 VDC

LED indicators without voltage reduction unit

Rated voltage	Rated current	Operating voltage
6 VDC	60 mA (20 mA)	6 VDC ±5%
6 VAC	60 mA (20 mA)	6 VAC/VDC ±5%
12 VAC/VDC	30 mA (10 mA)	12 VAC/VDC ±5%
24 VAC/VDC	15 mA (10 mA)	24 VAC/VDC ±5%

Super-bright LED indicator

Rated voltage	Rated current	Operating voltage
24 VAC/VDC	15 mA	24 VAC/VDC ±5%

Incandescent lamp

Rated voltage	Rated current	Operating voltage
6 VAC/VDC	200 mA	5 VAC/VDC
14 VAC/VDC	80 mA	12 VAC/VDC
28 VAC/VDC	40 mA	24 VAC/VDC
130 VAC/VDC	20 mA	100 VAC/VDC

Voltage-reduction lighting

Rated voltage	Operating voltage	Applicable lamp (BA8S/13_ gold)
110 VAC	95 to 115 VAC	LED Lamp (A22-24A_)
220 VAC	190 to 230 VAC	

Item		Pushbutton switches		Emergency stop switches		Knob-type selector switches		Key-type selector switch
		Non-lighted	Lighted	Non-lighted	Lighted	Non-lighted	Lighted	Non-lighted
Allowable operating frequency	Mechanical	Momentary operation: 60 operations/minute max.		30 operations/minute max.		Manual release: 30 operations/minute max., automatic release: 30 operations/minute max.		
	Electrical	30 operations/minute max.				30 operations/minute max.		
Durability (number of operations min.)	Mechanical	Momentary operation: 5,000,000		Momentary operation: 300,000		500,000	100,000	500,000
	Electrical	500,000		300,000		500,000	100,000	500,000
Ambient temperature	Operating	-20 to 70°C	-20 to 55°C	-20 to 70°C	-20 to 55°C	-20 to 70°C	-20 to 55°C	-20 to 70°C
	Storage	-40 to 70°C	-40 to 70°C	-40 to 70°C	-40 to 70°C	-40 to 70°C	-40 to 70°C	-40 to 70°C
Degree of protection		IP65 (oil-resistant)	IP65	IP65 (oil-resistant)	IP65	IP65 (oil-resistant)	IP65	IP65 (oil-resistant)
Size in mm (in-panel only)		34Hx34Wx54.7D, 34Hx34Wx72.7D for DPST switches						

Emergency stop switch

The A22E line-up of E-Stop switches offers various head types as well as lighted models. E-stop shrouds and control boxes as accessories provide flexibility in application.

- Direct opening mechanism with minimum contact separation of 3 mm
- Safety lock mechanism prevents misuse
- Easy mounting of switch block
- Lighted models for easy diagnosis and maintenance
- Modular design for flexibility in application

Ordering Information

Non-lighted models

Description	Output	Color of cap	Order code
30-dia. head Push-lock Turn-reset	SPST-NC	Red	A22E-S-01
	SPST-NO/SPST-NC		A22E-S-11
	DPST-NC		A22E-S-02
40-dia. head Push-lock Turn-reset	SPST-NC		A22E-M-01
	SPST-NO/SPST-NC		A22E-M-11
	DPST-NC		A22E-M-02
60-dia. head Push-lock Turn-reset	SPST-NC		A22E-L-01
	SPST-NO/SPST-NC		A22E-L-11
	DPST-NC		A22E-L-02
30-dia. head Push-lock Key-reset	SPST-NC		A22E-SK-01
	SPST-NO/SPST-NC		A22E-SK-11
	DPST-NC		A22E-SK-02
40-dia. head Push-lock Key-reset	SPST-NC		A22E-MK-01
	SPST-NO/SPST-NC		A22E-MK-11
	DPST-NC		A22E-MK-02

Lighted models

Description	Output	Lighting	Rated voltage	Color of cap	Order code
40-dia. head Push-lock Turn-reset	SPST-NC	LED	24 VAC/VDC	Red	A22EL-M-24A-01
	SPST-NO/SPST-NC		24 VAC/VDC		A22EL-M-24A-11
	DPST-NC		24 VAC/VDC		A22EL-M-24A-02
40-dia. head Push-lock Turn-reset	SPST-NC		220 VAC		A22EL-M-T2-01
	SPST-NO/SPST-NC		220 VAC		A22EL-M-T2-11
	DPST-NC		220 VAC		A22EL-M-T2-02

Accessories (Order separately)

Item	Classification	Remarks	Order code
Control boxes (enclosures)	One hole	Material: Polycarbonate resin	A22Z-B101
	One hole, yellow box (for emergency stop)		A22Z-B101Y
	Two holes		A22Z-B102
	Three holes		A22Z-B103
Legend plates for emergency stop	60-dia. black letters on yellow back-ground	"EMERGENCY STOP" is indicated on the plate.	A22Z-3466-1
	90-dia. black letters on yellow back-ground		A22Z-3476-1

Specifications

Contacts (standard load)

Rated carry current	Rated voltage	Rated current (A)			
		AC15	AC12	DC13	DC12
10	24 VAC	10	10	---	---
	220 VAC	3	6		
	24 VDC	---	---	1.5	10
	220 VDC			0.2	0.6

Note: 1. Rated current values are determined according to the testing conditions. The above ratings were obtained by conducting tests under the following conditions.
(1) Ambient temperature: 20×±2°C
(2) Ambient humidity: 65±5%
(3) Operating frequency: 20 operations/minute
2. Minimum applicable load: 10 mA at 5 VDC

Contacts (microload)

Rated applicable load	Minimum applicable load
50 mA at 5 VDC (resistive load)	1 mA at 5 VDC

Characteristics

Item		Emergency stop switches	
		Non-lighted model: A22E	Lighted model: A22EL
Dielectric strength		2,500 VAC, 50/60 Hz for 1 min between terminals of same polarity 2,500 VAC, 50/60 Hz for 1 min between terminals of different polarity and also between each terminal and ground	
Durability	Mechanical	Momentary operation: 300,000 operations min.	
	Electrical	300,000 operations min.	
Degree of protection		IP65 (oil-resistant)	IP65

Emergency stop switch

- Tension indicator – the tension indicator makes the system easy to set up and to maintain the proper rope tension
- Heavy-duty housing – the die-cast housing and stainless steel eye nut makes the ER series rope pull switches suitable for demanding industrial applications
- Vibration tolerant – the snap-acting switch contacts protect against nuisance tripping due to vibration
- Integral E-stop – the E-stop button provides emergency stopping capability at the extreme end of the installation and is field serviceable
- ER6022 available in stainless steel housing
- ER6022, ER1022 and ER1032 available in explosion proof housing

Ordering information

Standard models

Aluminium die-cast housing

E-Stop	Indicator beacon	Contacts	Wiring entry	Order code
Not included	–	2 N/C + 1 N/O	3 x M20	ER5018-021M
Not included	–	3 N/C	3 x M20	ER5018-030M
Included	–	2 N/C + 1 N/O	3 x M20	ER5018-021ME
Included	–	3 N/C	3 x M20	ER5018-030ME
Not included	Not included	2 N/C + 1 N/O	3 x M20	ER6022-021M
Not included	Not included	3 N/C	3 x M20	ER6022-030M
Not included	Included (24 VDC)	2 N/C + 1 N/O	3 x M20	ER6022-021ML
Not included	Included (24 VDC)	3 N/C	3 x M20	ER6022-030ML
Included	Not included	2 N/C + 1 N/O	3 x M20	ER6022-021ME
Included	Not included	3 N/C	3 x M20	ER6022-030ME
Included	Included (24 VDC)	2 N/C + 1 N/O	3 x M20	ER6022-021MEL
Included	Included (24 VDC)	3 N/C	3 x M20	ER6022-030MEL
Included	Included (24 VDC)	4 N/C + 2 N/O	4 x M20	ER1022-042MELL
Included	Included (24 VDC)	4 N/C + 2 N/O	4 x M20	ER1022-042MELR
Included	Included (24 VDC)	4 N/C + 2 N/O	4 x M20	ER1032-042MEL

Stainless steel housing

E-Stop	Indicator beacon	Contacts	Wiring entry	Order code
Not included	Not included	2 N/C + 2 N/O	3 x M20	ER6022-022MSS
Not included	Not included	3 N/C + 1 N/O	3 x M20	ER6022-031MSS
Not included	Included	2 N/C + 2 N/O	3 x M20	ER6022-022MLSS
Not included	Included	3 N/C + 1 N/O	3 x M20	ER6022-031MLSS
Included	Not included	2 N/C + 2 N/O	3 x M20	ER6022-022MESS
Included	Not included	3 N/C + 1 N/O	3 x M20	ER6022-031MESS
Included	Included	2 N/C + 2 N/O	3 x M20	ER6022-022MELSS
Included	Included	3 N/C + 1 N/O	3 x M20	ER6022-031MELSS

Explosion proof models

Aluminum die-cast housing

E-Stop	Indicator beacon	Contacts	Wiring entry	Order code
Not included	Not included	1 N/C + 1 N/O	pre-wired, 3 m	XER6022-011C3
Not included	Not included	1 N/C + 1 N/O	pre-wired, 3 m	XER1022-011C3L
Not included	Not included	1 N/C + 1 N/O	pre-wired, 3 m	XER1022-011C3R
Not included	Not included	1 N/C + 1 N/O	pre-wired, 3 m	XER1032-011C3

Stainless steel housing

E-Stop	Indicator beacon	Contacts	Wiring entry	Order code
Not included	Not included	1 N/C + 1 N/O	pre-wired, 3 m	XER6022-011C3SS
Not included	Not included	2 N/C	pre-wired, 3 m	XER6022-020C3SS

Accessories

Item	Applicable model	Order code
Replacement Lid	ER 5018	SM06-SL400
	ER 6022	SM06-SL500
	ER6022-SS stainless steel	SM06-SLXER6022SS
Replacement Lid/LED, 24 VDC	ER 1022	EM06-SL710
	ER 1032	SM06-SL711
	ER6022-SS stainless steel	SM06-SLXER622LSS
Replacement Lid/LED	ER 6022	SM06-SL510
Rope kit, 5 m, stainless steel	ER 5018, ER 6022, ER 1022, ER 1032	RK5
Rope kit, 10 m, stainless steel	ER 5018, ER 6022, ER 1022, ER 1032	RK10
Rope kit, 20 m, stainless steel	ER 5018, ER 6022, ER 1022, ER 1032	RK20
Rope kit, 50 m, stainless steel	ER 5018, ER 6022, ER 1022, ER 1032	RK50
Rope kit, 80 m, stainless steel	ER 6022, ER1022, ER1032	RK80
Rope only, 5 m	ER 5018, ER 6022, ER 1022, ER 1032	R5M
Rope only, 10 m	ER 5018, ER 6022, ER 1022, ER 1032	R10M
Rope only, 20 m	ER 5018, ER 6022, ER 1022, ER 1032	R20M
Rope only, 50 m	ER 5018, ER 6022, ER 1022, ER 1032	R50M
Rope only, 100 m	ER 5018, ER 6022, ER 1022, ER 1032	R100M
Rope only, 126 m	ER 5018, ER 6022, ER 1022, ER 1032	R126M
Tensioner gripper, stainless steel	ER 5018, ER 6022, ER 1022, ER 1032	SM06-TG00
Eye bolt stainless steel, 8 per pack	ER 5018, ER 6022, ER 1022, ER 1032	SM06-EB10
Double loop clip, stainless steel, 4 per pack	ER 5018, ER 6022, ER 1022, ER 1032	SM06-DL20
Thimble stainless steel, 4 per pack	ER 5018, ER 6022, ER 1022, ER 1032	SM06-THSS
Turnbuckle, stainless steel	ER 5018, ER 6022, ER 1022, ER 1032	SM06-TB30
Spring, stainless steel	ER 5018, ER 6022, ER 1022, ER 1032	SM06-SP50
Rope pulley, stainless steel	ER 5018, ER 6022, ER 1022, ER 1032	SM06-RPSS
E-Stop mechanism	ER 5018, ER 6022, ER 1022, ER 1032	SM06-ES60

Specifications

Standard models

Item		Applicable model			
		ER 5018	ER 6022	ER 1022	ER 1032
Electrical	Contact configurations	2 N/C + 1 N/O, 3 N/C	2 N/C + 1 N/O, 3 N/C, 3N/C + 1N/O	4 N/C + 2 N/O	4 N/C + 2 N/O
	Safety contacts	2 N/C, 3 N/C	2 N/C, 3 N/C	4 N/C	
	Switching ability	AC: 120 V–6 A, 240 V–3 A, inductive DC: 24 V–2.5 A, inductive			
	Auxiliary contacts	1 N/O		2 N/O	
	Max. switching current/Volt/Amp	240 V/720 VA			
	Electrical life	1,000,000 minimum			
	LED indicator beacon	–	24 VDC		
Mechanical	Max. rope span	40 m	80 m	125 m	125 m each side
	Case material	Die-cast aluminum alloy			
	Eye nut material	Stainless steel			
	Wiring entry	3 x M20		4 x M20	
	Mechanical life	1,000,000 minimum			
Environ-mental	Protection	IP67 (NEMA 6)			
	Operating temperature	-25 to 80°C			
	Cleaning	Water washdown			
Com-pliance	Standards	IEC947-5-1, IEC947-5-5, EN418, UL508, BS5304			
	Approvals/listings	CE marked for all applicable directives, UL and C-UL			

Explosion proof models

Item			Applicable model		
			XER6022	XER1022	XER1032
Electrical	Contact configuration		1 N/C + 1 N/O, 2 N/C		
	Safety contact		1 N/C, 2 N/C		
	Auxiliary contact		1 N/O		
	Rated voltage AC15		400 VAC	250 VAC	250 VDC
	Rated current		2 A AC	4 A AC	0.15 A DC
	Switching ability AC ratings	Voltage	250 V	125 V	
		Resistive load	5A		
		Inductive load	3A		
	Switching ability DC ratings	Voltage	250V	30V	
		Resistive load	0,4A	7A	
		Inductive load	0,03A	5A	
Com-pliance	Ex-classification		II 2 G	EEx d II C T6	
	Certification		PTB 00 ATEX 1093X	IBExU 01 ATEX 1007X	

Accessories

RK rope tension kit

The RK rope tension kit comes with all of the required hardware for most installations. A spring is required as shown in the installation example below.

Installation Hardware

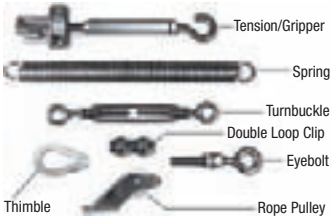

Individual hardware items may be purchased for specific installation requirements.

PATLITE distributed by Omron

Versatile modular signal tower featuring easy assembly and wiring designed for every need.

LU5 Series - Medium size modular system provides beside hybrid prism cut lens for enhanced visibility from any direction and distance two selectable sound patterns up to 85 dB. Main features are the interchangeable LED modules and the color coordinated wiring for easy alignment.

- Diameter: 50 mm
- Base modules available in ivory white or in silver
- Up to 5 LED modules can be used on the light tower
- Modules of the same color operate from different terminals
- Two, user - selectable, alarms integrated in the base module with adjustable volume up to 85 dB at 1 m

Nomenclature/how to order

LED module

LU5-E-R
1 2

1. E: LED unit
2. Color of LED
   R: Red
   Y: Yellow
   G: Green
   B: Blue
   C : Clear/White

Base module

LU5-02UFB
1 2 3

1. Rated voltage
   02: 24 VDC
2. Unit color
   Blank: Ivory white
   U: Silver color
3. Type
   Blank: Continuous light
   FB: Continuous or flashing light with audible alarm

Ordering information

LED module

Module color	Power consumption	Rated voltage	Operation voltage	Operation temperature range	Mass	Order code
Red	52 mA/1.25 W	24 VDC	Rated voltage ±10% (21.6~26.4 V)	-30°C~+60°C	44 g ±10%	LU5-E-R
Yellow						LU5-E-Y
Green	42 mA/1.0 W					LU5-E-G
Blue						LU5-E-B
Clear						LU5-E-C

Base module

Typ	Alarm/Flash	Power consumption	Rated voltage	Operation voltage	Operation temperature range	Mass	Open collector	Order code
Standard body	Continuous	1.2 W	24 VDC	Rated voltage ±10% (21.6 ~ 26.4 V)	-30°C~+60°C	182g ±10%	PNP/ NPN	LU5-02*
	2 Sounds/Flashlight					200g ±10%		LU5-02FB*

* Ivory white: black, silver: add "U"

Optional parts

Typ	Material	Order code
Wall mount bracket	Aluminum alloy die-cast	SZ-017
	ABS resin	SZ-020
Upper bracket	Metal	SZ-60NPT
		SZ-60U
Mount bracket	Aluminum alloy die-cast	SZ-016A
		SZ-70B

Typ	Height	Material	Order code
Pole	100 mm	Aluminium	Pole-100A21
	300 mm	Aluminium	Pole-300A21
	800 mm	Aluminium	Pole-800A21

Features

LED module is stackable and reconfigurable even after installation

IP 65: Implemented o rings seal out liquids so that the tower can be used in wet conditions.

Dimensions

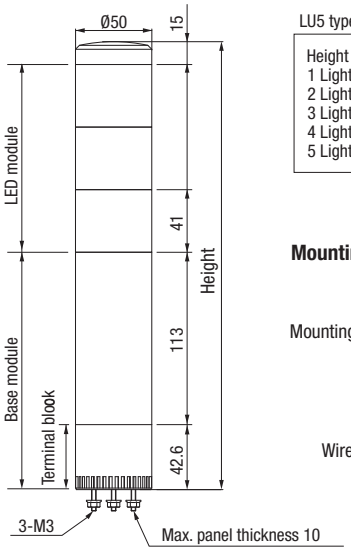

LU5 type

Height (mm)
1 Light: 211
2 Lights: 252
3 Lights: 293
4 Lights: 334
5 Lights: 375

Mounting dimension

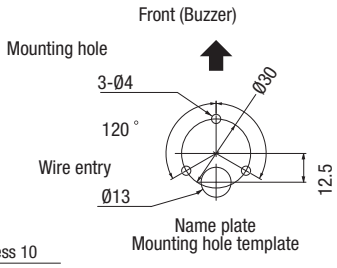

(mm)

Wiring diagram

LU5-02FB
24 VDC

No.1	Red	LED unit Red
No.2	Orange	LED unit Yellow
No.3	Green	LED unit Green
No.4	Blue	LED unit Blue
No.5	White	LED unit Clear/White
No.6	Gray	Alarm 1
No.7	Black	Alarm 2
No.8	Yellow	COM
No.9	Gray	Flashing COM
No.10	Black	Power supply for flashing

<Recommended electric wire>
Solid wire: 0.8-1.2 mm dia.
Stranded wire : 0.3-1.25 mm^2 (AWG 22-18)

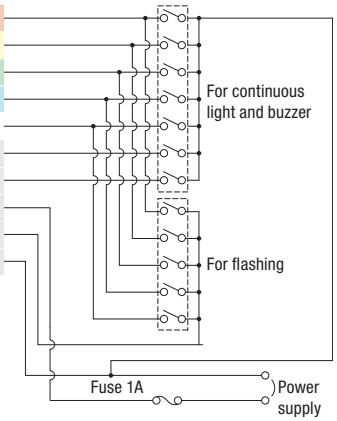

How to order

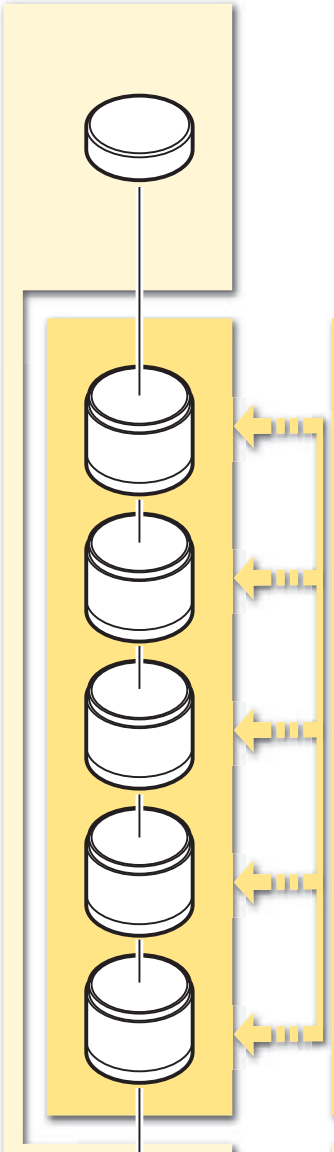

LED units

Model	LU5-E-R	LU5-E-Y	LU5-E-G	LU5-E-B	LU5-E-C
Unit color					
Rated voltage	24 VDC				
Operating voltage range	Rated voltage±10% (21.6~26.4 V)				
Current/power consumption	52 mA/1.25 W		42 mA/1.0 W		
Operating temperature range	-30°C~+60°C				
Mass	44 g±10%				

RED YELLOW GREEN BLUE CLEAR/WHITE

BASE units

Model	LU5-02	LU5-02FB	
Color			
Standard body/short body	Standard		
Rated voltage	24 VDC		
Operating voltage range	Rated voltage±10%(21.6~26.4 V)		
Buzzer	–	*Buzzer 1	**Buzzer 2
Current consumption	–	50±10 mA	24±10 mA
Power consumption	–	1.2±0.25 W	0.58±0.25 W
Sound level	–	Max: 85±5 dB (at 1 m)	
Flashing cycle	–	6±12 flashes per minutes	
Operating temperature Range	-30°C~+60°C		
Mounting direction	Upright, indoor only		
Protection rating	IP65		
Mass	182 g±10%	200 g±10%	
Open collector	PNP/NPN		

* Buzzer 1: Continuous sound **Buzzer 2: Intermittent sound

Ivory white Silver color (U)

Optional parts

Optional parts

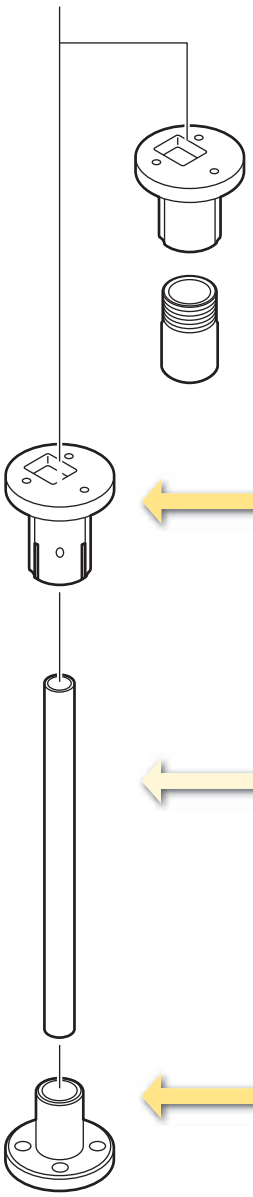

Upper bracket

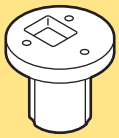

SZ-60NPT (for 1/2" NPT pole)

Upper bracket

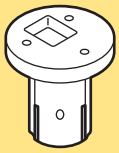

SZ-60-U

Pole

Steel pole

Model	POLE-800S21	POLE-300S21	POLE-100S21
Height	800 mm	300 mm	100 mm

Aluminum pole

Model	POLE-800A21	POLE-300A21	POLE-100A21
Height	800 mm	300 mm	100 mm

Mount bracket

SZ-016A
(For Ø21.7 mm pole)

SZ-70-B
(For Ø21.7 mm aluminium pole only)

Wall mount bracket

SZ-020
(For Ø21.7 mm pole)

SZ-017
(For Ø21.7 mm pole)

Specifications

Size	50 mm diameter
Input voltage options	24 VDC
Functions available	• Continuous only • Continuous, flashing, alarms
Mounting options	Direct mount only, includes 3 mounting nuts
Body styles	• Component style, wiring terminals provided • Interchangeable and stackable after purchase
Body colours	Beige
Tiers	1-5 modules can be stacked
Module colors	Red / Yellow / Green / Blue / Clear
Alarms (FB style only)	• Alarm 1: selectable, single-tone, continuous alarm, 85 dB (at 1 m) • Alarm 2: selectable, single tone, intermittent (slow beep) alarm, 85 dB (at 1 m)
Ratings	• CE • UL listed (US) • UL listed (Canada) • RoHS
Protection	• IP-65 • Type 4 / 4X / 13 (indoor only)
Control options	• Dry contact closure such as switches or relay contacts • Open-collector transistor (NPN or PNP) for 24 VDC • Direct voltage control for 24 VDC, continuous and alarm functions only

PATLITE distributed by Omron

Versatile modular signal tower featuring easy assembly and wiring designed for every need.

LU7 presents ultra bright LEDs combined with an innovative prism lens design. 1 to 5 modules can be arranged in tiers.

- Diameter: 70 mm
- Base module in 2 sizes and 3 colors
- Different modules: standard LED, strobe LED and sound
- Two, user - selectable, alarms integrated in the base module with adjustable volume up to 90 dB at 1 m.
- Color-coordinated and spring-loaded terminal block

Ordering information

LED module

Typ	Module color	Power consumption	Rated voltage	Operation voltage	Operation temperature range	Mass	Order code
Standard	Red	52 mA/1.25 W	24 VDC	Rated voltage ±10% (21.6~26.4 V)	−30°C~+60°C	60 g ±10%	LU7-E-R
	Yellow						LU7-E-Y
	Green	42 mA/1.0 W					LU7-E-G
	Blue						LU7-E-B
	Clear/White						LU7-E-C
Strobe	Red	290 mA	24 VDC	Rated voltage ±10% (21.6~26.4 V)	−30°C~+60°C	0,07 kg	LU7-XE-R
	Yellow						LU7-XE-Y
	Green	140 mA					LU7-XE-G
	Blue	270 mA					LU7-XE-B
	Clear/White	280 mA					LU7-XE-C

Base module

Typ	Alarm/Flash	Power consumption	Rated voltage	Operation voltage	Operation temperature range	Mass	Open collector	Order code
Short body	Continuous	1.2 W	24 VDC	Rated voltage ± 10% (21.6~26.4 V)	-30°C~+60°C	150 g ±10%	PNP/ NPN	LU7-02S*
Standard body	Continuous					250 g ±10%		LU7 - 02*
	2 Sounds/Flashlight					280 g ±10%		LU7 -02FB*

* Ivory white: blank, black: add "K", silver: add "U"

Optional parts

Typ	Material	Order code
Wall mount bracket	Aluminum alloy die-cast	SZ-017
	PBT/ ABS resin	SZ-018
		SZ-018U
		SZ-018K
	ABS resin	SZ-020
Upper bracket	Metal	SZ - 50U
		SZ - 50UU
		SZ - 50KU
		SZ - 50NPT
Mount bracket	Aluminum alloy die-cast	SZ-016A
		SZ-70B

Typ	Height	Material	Order code
Pole	100 mm	Aluminium	Pole-100A21
		Steel	Pole-100S21
	300 mm	Aluminium	Pole-300A21
		Steel	Pole-300S21
	800 mm	Aluminium	Pole-800A21
		Steel	Pole-800S21

Voice and sound module (unique sound module in all directions)

Rated voltage	Power consumption	Mass	Order code
24 VDC	3.5 W	0.17 kg	LU7-V1

Features

Easy alignment:
Color-coordinated terminal block:
Corresponds to the lens colors for quick wiring verification in the base unit.

LU7-02FB

LU7
Standard body

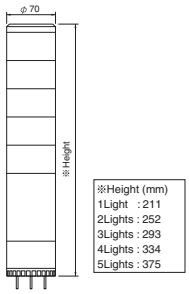

LU7-02S
Short body

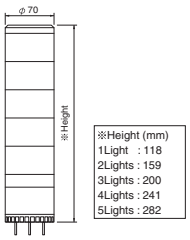

Mounting dimensions

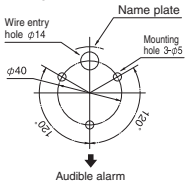

How to order

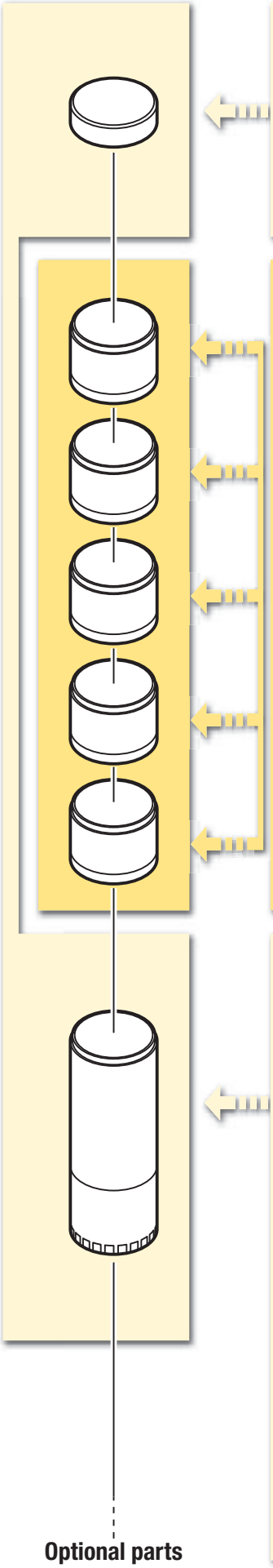

Voice and sound module

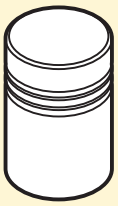

Model	LU7-V1
Type	Voice synthesizer
Rated voltage	24 VDC
Power consumption	3.5 W
Weight	0.17 kg

LED units

Model	LU7-E-R	LU7-E-Y	LU7-E-G	LU7-E-B	LU7-E-C
Unit color	●	●	●	●	○
Rated voltage	24 VDC				
Operating voltage range	Rated voltage±10% (21.6~26.4 V)				
Current/power consumption	52 mA/1.25 W		42 mA/1.0 W		
Operating temperature range	-30°C~+60°C				
Mass	60 g±10%				

LED strobe module

Model	LU7-XE-R	LU7-XE-Y	LU7-XE-G	LU7-XE-B	LU7-XE-C
Unit color	●	●	●	●	○
Rated voltage	24 VDC				
Power consumption	290 mA	290 mA	140 mA	270 mA	280 mA
Mass	0.07 kg				

● RED ● YELLOW ● GREEN ● BLUE ○ CLEAR/WHITE

BASE units

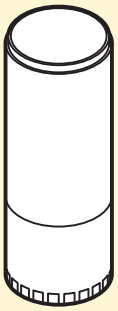

Standard body

Short body

Model	LU7-02S	LU7-02	LU7-02FB	
Color	○ ● ●			
Standard body/short body	Short	Standard		
Rated voltage	24 VDC			
Operating voltage range	Rated voltage±10% (21.6~26.4 V)			
Buzzer	–		*Buzzer 1	**Buzzer 2
Current consumption	–		50±10 mA	24±10 mA
Power Ccnsumption	–		1.2±0.25 W	0.58±0.25 W
Sound level	–		Max: 90±5d B (at 1 m)	
			Min: 70 dB or Less (at 1 m)	
Flashing cycle	–		60±12 flashes per minute	
Operating temperature Range	-30°C~+60°C			
Mounting direction	Upright, indoor only			
Protection rating	IP65			
Mass	150 g±10%	250 g±10%	280 g±10%	
Open collector	PNP/NPN			

* Buzzer 1: Continuous sound **Buzzer 2: Intermittent sound

○ Ivory white ● Silver color (U) ● Black (K)

Optional parts

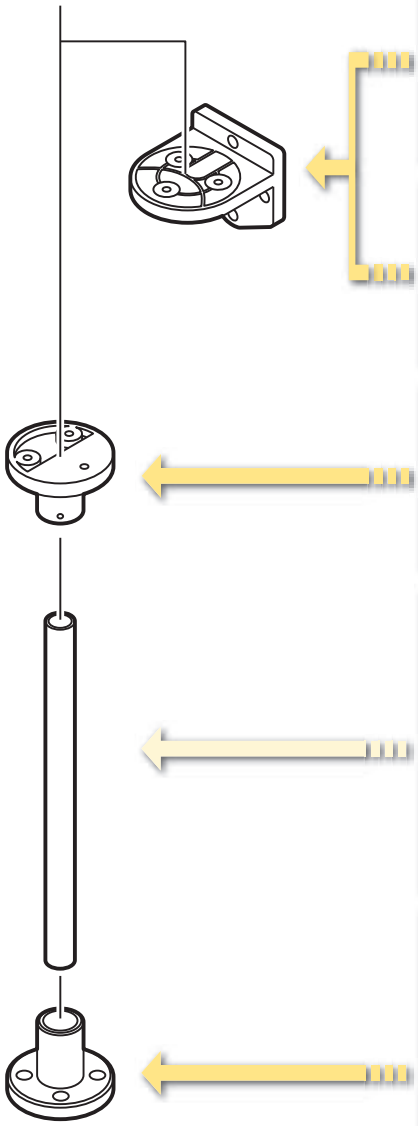

Wall mount bracket

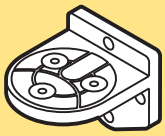

Model	SZ-18	SZ-18U	SZ-18K
Color	Ivory white	Silver color (U)	Black (K)

Upper bracket

SZ-50NPT(For 1/2" NPT pole)

Upper bracket

Model	SZ-50-U	SZ-50U-U	SZ-50K-U
Color	Ivory white	Silver color (U)	Black (K)

Pole

Steel pole

Model	POLE-800S21	POLE-300S21	POLE-100S21
Height	800 mm	300 mm	100 mm

Aluminum pole

Model	POLE-800A21	POLE-300A21	POLE-100A21
Height	800 mm	300 mm	100 mm

Mount bracket

SZ-016A
(For Ø21.7 mm pole)

SZ-70-B
(For Ø21.7 mm Aluminium pole only)

Wall mount bracket

SZ-020
(For Ø21.7 mm pole)

SZ-017
(For Ø21.7 mm pole)

Specifications

Size	70 mm diameter
Input voltage options	• 24 VDC
Functions available	• Continuous only • Continuous, flashing, alarms
Mounting options	Direct mount only: includes three mounting nuts
Body style	• Component style, wiring terminals provided • Interchangeable and stackable after purchase
Body color	• Beige • Black • Silver
Tiers	1-5 modules can be stacked
Module colors	• Red / Yellow / Green / Blue / Clear • Standard LED modules • Strobe-flash LED modules (24 V bases only)
Alarms (FB style only)	• Alarm 1: selectable, single-tone, continuous alarm, 90 dB (at 1 m) • Alarm 2: selectable, single tone, intermittent (slow beep) alarm, 90 dB (at 1 m)
Ratings	• CE • UL listed (US) • UL listed (Canada) • RoHS
Protections	• IP-65 • Type 4/4X/13 (indoor only)
Control options	• Dry contact closure such as switches or relay contacts • Open-collector transistor (NPN or PNP for 24 VDC • Direct voltage control for 24 VDC, continuous and alarm functions only

PATLITE distributed by Omron

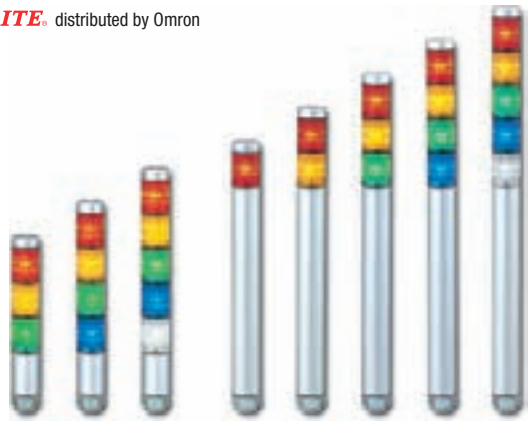

Super slim 30 mm silver body signal tower ideal for small devices

MP/MPS signal towers provide double insulation and superior UV resistant and light translucent AS resin lenses for enhanced durability and reliability in application environment. The 30mm diameter is ideal for small and mid-sized machines.

Up to 5 colored modules can be combined using a single mounting hole. Modules can be easily added without dismounting the whole signal tower to reduce installation effort.

- Special pre-wired versatile with 1 connection cable
- NPN/ PNP compactible
- IP65
- Each color of LED module corresponds to the lead wire color.
- Available colors are Red, Yellow, Green, Blue and Clear/White.
  All colors as clear-lens modules available

Nomenclatur/how to order:

MP-502-RYGBC-B0438
1 2 3 4 5

1. MP: Standard body
   MPS: Short body
2. Stack
   1~5
3. Rated voltage
   02: 24 V AC/DC
4. Color of LED
   R: Red
   Y: Yellow
   G: Green
   B: Blue
   C: Clear/White
   Top to bottom
5. Color of lense
   Blank: Colored lens
   B0438: Clear lens

Ordering information

Number of stacks	Rated voltage	Power consumption	Open collector	Order code
1	24 VAC/VDC	0.7 W	NPN/PNP	MP/MPS-102
2		1.4 W		MP/MPS-202
3		2.0 W		MP/MPS-302
4		2.6 W		MP/MPS-402
5		3.2 W		MP/MPS-502

Features

Patented reflection system increases visibility.

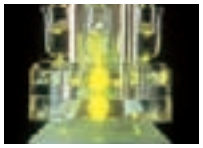

High intensity LED

Good visibility from any direction

Interchangeable LED modules

- Changeable color sequence: Easy to add/remove up to 5 colored modules even after installation.
- Note: LED modules of the same color will light up simultaneously.

The wiring remains the same.

Each color of LED module corresponds to the lead wire color.

Dimensions

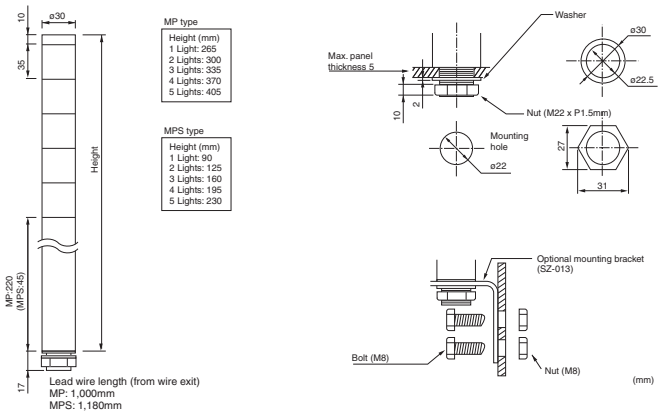

Wiring diagram

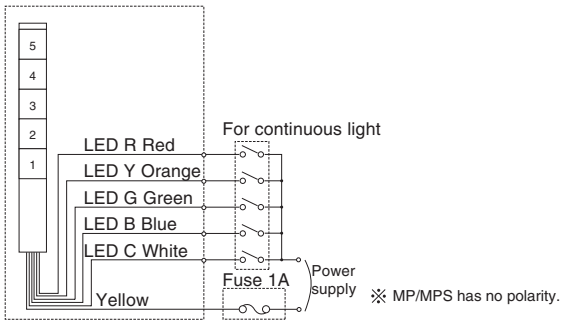

Specifications

Size	30 mm diameter
Input voltage options	24 VAC/VDC
Functions available	Continuous only
Mounting options	Direct mount only: includes M22 mounting nut and sealing gasket
Body style	• pre-assembled, pre-wired • Interchangeable and stackable after purchase
Body color	Silver
Tiers	1-5 modules can be stacked
Module colors	Red / Yellow / Green / Blue / Clear-White (for sunlight applications: clear-lense modules in all colors available)
Alarms (FB style only)	• CE • UL component recognition (US) • UL component recognition (Canada) • RoHS
Protection	IP-65
Control options	• Dry contact closure such as switches or relay contacts • Open-collector transistor (NPN or PNP) for 24 VDC • Direct voltage control

PATLITE distributed by Omron

Versatile, cost and energy efficient LED signal tower for every need

The LME series indicating light provides the latest in LED technology. 1 to 5 modules can be arranged in tiers. The original dual reflection system for enhanced light diffusion, creates bright distinctive illumination while saving energy (patent pending).

LME signal towers provide double insulation and superior UV resistant and light translucent AS resin lenses for enhanced durability and reliability in application environment.

Available Colors are Red, Yellow, Green, Blue and Clear/White.
All colors as clear-lense modules available

- Diameter: 60 mm
- 2 selectable built- in alarms with adjustable volume up to 90 dB at 1 m for FB type
- Special pre-wired versatile and flexible cable connection of 3 m
- NPN/ PNP compatible
- IP 65

Nomenclature/how to order

LME-502UFBW-RYGBC-Z
1 2 3 4 5 6 7

1. Stack
   1 ~ 5
2. Rated voltage
   02: 24V AC/DC
3. Body color
   Blank: Ivory white
   N: Black color
   U: Silver color
4. Type
   Blank: Continuous light
   FB: Continuous light or flashing light with audible alarm
5. Mount
   Blank: Pole mount
   K: Pole mount (with SZ-020)
   W: Direct mount
6. Color of LED
   R: Red
   Y: Yellow
   G: Green
   B: Blue
   C: Clear/White
7. Color of Lens
   Blank: Colored lens
   Z: Clear lens

Ordering information

Number of stacks	Mount	Model	Rated voltage	Power consumption	Open collector	Order code	
						Continuos light	Continuous light with audible alarm
1	Pole mount	LME-102	24 VAC/DC	2.2 W	NPN/ PNP	LME-102-C	LME-102-FB-C
	Direct mount		24 VAC/DC			LME-102W-C	LME-102-FBW-C
2	Pole mount	LME-202	24 VAC/DC	3.4 W		LME-202-C	LME-202-FB-C
	Direct mount		24 VAC/DC			LME-202W-C	LME-202-FBW-C
3	Pole mount	LME-302	24 VAC/DC	3.8 W		LME-302-C	LME-302-FB-C
	Direct mount		24 VAC/DC			LME-302W-C	LME-302-FBW-C
4	Pole mount	LME-402	24 VAC/DC	4.2 W		LME-402-C	LME-402-FB-C
	Direct mount		24 VAC/DC			LME-402W-C	LME-402-FBW-C
5	Pole mount	LME-502	24 VAC/DC	4.6 W		LME-502-C	LME-502-FB-C
	Direct mount		24 VAC/DC			LME-502W-C	LME-502-FBW-C

Optional parts

Typ	Material	Order code
Wall mount bracket	Aluminum alloy die-cast	SZ-017
	ABS resin	SZ-020
	PBT/ ABS resin	SZ-028
Mount bracket	Aluminum alloy die-cast	SZ-016A
	Aluminum alloy die-cast	SZ-010

Typ	Height	Material	Order code
Pole	100 mm	Aluminium	Pole-100A21
		Steel	Pole-100S21
	300 mm	Aluminium	Pole-300A21
		Steel	Pole-300S21
	800 mm	Aluminium	Pole-800A21
		Steel	Pole-800S21

Dimensions

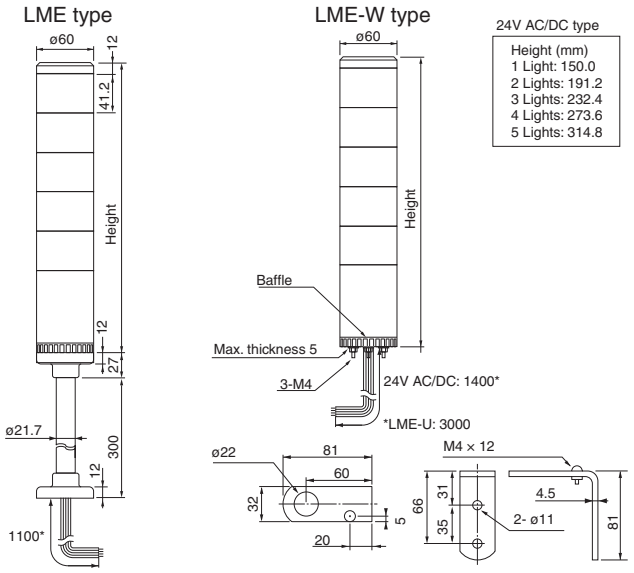

Wiring diagram

LME(–W)/LME(–W)-S·Q/LMS [Continuous type]

■ 24V AC/DC

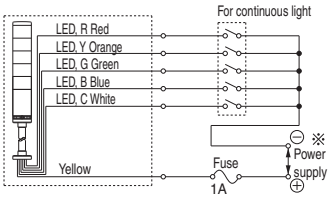

Features

Interchangeable LED modules

- Changeable color sequence: Easy to add / remove up to 5 colored modules even after installation.
- Note: LED modules of the same color within a signal tower will light up simultaneously.

The wiring remains the same

Each color of LED module corresponds to the lead wire color.

Easy to add and remove

If the number of LED module is changed, center shaft must be purchased.

Dual reflection system

PATLITE's original dual reflection system with its exclusive hybrid prism-cut lens and 5 color LED modules create bright, distinctive, even illumination.

To bring more attention to certain conditions, two, User-selectable, Alarms integrated in the Base module with adjustable volume up to 85 dB at 1m are available.

Specifications

Size	60 mm diameter
Input voltage options	• 24 VAC/VDC
Functions available	• Continuous only • Continuous, flashing, alarms
Mounting options	• Pole mount: with 300 mm aluminum pole, plastic circular bracket • Direct mount: includes 3 mounting nuts
Body style	• Pre-assembled, pre-wired • Interchangeable and stackable after purchase
Body color	Beige (optional: Black or silver)
Tiers	1-5 modules can be stacked
Module colors	Red / Yellow / Green / Blue / Clear/White (for sunlight applications: clear-lense modules in all colors available)
Alarms (FB style only)	• Alarm 1: selectable, single-tone, intermittent (fast beep) alarm, 85 dB (at 1 m) • Alarm 2: selectable, single tone, intermittent (slow beep) alarm, 85 dB (at 1 m)
Ratings	• CE • UL component recognition (US) • UL component recognition (Canada) • RoHS
Protection	• IP-65 (LME, LME-W) • IP-54 (LME-FB, LME-FBW) • Type 4/4X/13 (indoor, direct-mount only)
Control options	• Dry contact closure such as switches or relay contacts • Open-collector transistor (NPN or PNP for 24 VDC) • Direct voltage control for 24 VDC, continuous and alarm functions only

SAFETY LIMIT SWITCHES

Precise monitoring of guard position

Guards and covers on machines protect workers. They limit access to the dangerous parts of the machine. Our Safety limit switches guarantee that the guards and covers are in place before the machine is started.

Safety limit switch with plastic housing

D4N-_	see page 56

- Wide variety of actuators
- Gold-plated contacts for micro loads
- Double insulation
- 1- and 2 conduit models
- M12 connector
- Direct opening mechanism

SAFE CONTROL SYSTEMS FOR SAFETY LIMIT SWITCHES

Safety Relay Units		Flexible Safety Units	Safety Controllers	
				
G9SB	G9SA	G9SX	G9SP	NEA1
see page 90	see page 91	see page 96	see page 100	see page 102

metal housing:

D4B_N

page 54

small housing:

D4F

Datasheet available on DVD

hinge operation:

D4NH

page 58

manual reset:

D4N_R

page 59

Limit switch with metal housing

The D4BN family is a complete line-up of limit switches in metal housing.
They are available with two built-in contacts and a wide range of head and actuator types. To set up easy installation and maintenance, various conduit types, e.g. M20, are provided.

- Direct opening mechanism
- Various actuators
- Robust metal housing
- Gold-plated contacts for handling micro loads
- Metric conduit types available

Ordering information

		Order code				
		Switches (EN50041)			3-conduit Switch	
		1NC/1NO (snap-action)	1NC/1NO (slow-action)	2NC (slow-action)	1NC/1NO (snap-action)	2NC (slow-action)
	Roller lever	**D4B-4111N**	**D4B-4511N**	**D4B-4A11N**	**D4B-8111N**	–
	Adjustable roller lever	D4B-4116N	D4B-4516N	D4B-4A16N	D4B-8116N	–
	Adjustable rod lever	D4B-4117N	D4B-4517N	D4B-4A17N	D4B-8117N	–
	Plain	**D4B-4170N**	**D4B-4570N**	**D4B-4A70N**	–	–
	Roller	**D4B-4171N**	**D4B-4571N**	**D4B-4A71N**	**D4B-8171N**	**D4B-8A71N**
	Coil spring	D4B-4181N	–	–	–	–
	Plastic rod	D4B-4187N	–	–	–	–

Note: The above models provide terminal block with M20 conduit. Conduit sizes G1/2 and PG 13.5 are also available.

bold = safety limit switch, mechanical form lock

Specifications

Item		Snap-action	Slow-action
Durability [*1]	**Mechanical**	30,000,000 operations min.	10,000,000 operations min.
	Electrical	500,000 operations min. (at a 250 VAC, 10 A resistive load)	
Operating speed		1 mm/s to 0.5 m/s	
Operating frequency		Mechanical: 120 operations/min Electrical: 30 operations/min	
Rated frequency		50/60 Hz	
Contact resistance		25 mΩ max. (initial value)	
Pollution degree (operating environment)		3 (EN60947-5-1)	
Conditional short-circuit current		100 A (EN60947-5-1)	
Conventional enclosed thermal current (I_{th})		20 A (EN60947-5-1)	
Protection against electric shock		Class I (with ground terminal)	
Ambient temperature		Operating: -40 to 80°C (with no icing) [*2]	
Degree of protection		IP67 (EN60947-5-1)	

[*1] The durability is for an ambient temperature of 5 to 35°C and ambient humidity of 40 to 70%. For further conditions, consult your Omron sales representative.
[*2] -25 to 80°C for the flexible-rod type.

1NO/1NC contact (snap-action)

If metal deposition between mating contacts occurs on the NC contact side, they can be pulled apart by the shearing force and tensile force generated when part B of the safety cam or plunger engages part A of the movable contact blade. When the safety cam or plunger is moved in the direction of the arrow, the limit switch releases.

1. When metal deposition occurs.

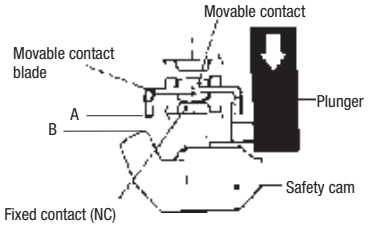

2. When contacts are being pulled apart.

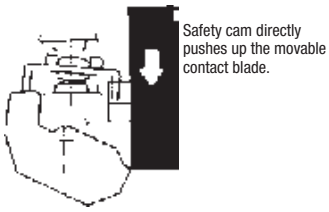

3. When contacts are completely pulled apart.

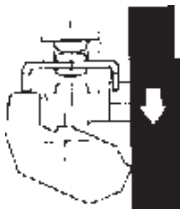

1NC/1NO contact (slow-action)

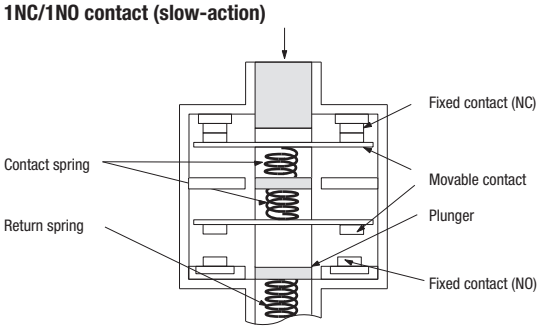

Conforms to EN60947-5-1 direct opening

When metal deposition occurs, the contacts are separated from each other by the plunger being pushed in.

2NC contact (slow-action)

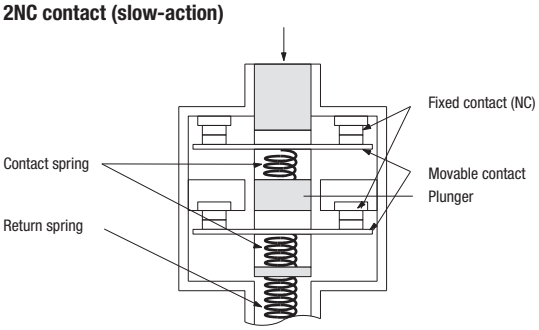

Conforms to EN60947-5-1

When metal deposition occurs, the contacts are separated from each other by the plunger being pushed in.

is marked on the product to indicate approval of direct opening.

Limit switch with plastic housing

The D4N-family is a complete line-up of limit switches. They are available with one, two or three built-in contacts and a wide range of head and actuator types. The limit switches intuitive to set up, install and maintain.

- Direct opening mechanism
- Wide range of actuators
- Double insulation
- Gold-plated contacts for handling micro loads
- M12 connector terminal blocks (with M20, PG13,5 conduit)

Ordering information

Switches		Connection method		Order code			
				1NC/1NO (snap-action)	1NC/1NO (slow-action)	2NC (slow-action)	2NC/1NO (slow-action)
				Order code	Order code	Order code	Order code
	Roller lever (resin lever, resin roller)	1-conduit	M20[*1]	D4N-4120	D4N-4A20	D4N-4B20	D4N-4C20
			M12 connector	D4N-9120	D4N-9A20	D4N-9B20	–
		2-conduit	M20[*1]	–	–	–	D4N-8C20
	Plunger	1-conduit	M20[*1]	D4N-4131	D4N-4A31	D4N-4B31	–
			M12 connector	D4N-9131	D4N-9A31	D4N-9B31	–
		2-conduit	M20[*1]	D4N-8131	D4N-8A31	D4N-8B31	–
	Roller plunger	1-conduit	M20[*1]	D4N-4132	D4N-4A32	D4N-4B32	D4N-4C32
			M12 connector	D4N-9132	D4N-9A32	D4N-9B32	–
		2-conduit	M20[*1]	D4N-8132	D4N-8A32	D4N-8B32	D4N-8C32
	One-way roller arm lever (horizontal)	1-conduit	M20[*1]	D4N-4162	D4N-4A62	D4N-4B62	D4N-4C62
			M12 connector	D4N-9162	D4N-9A62	D4N-9B62	–
		2-conduit	M20[*1]	D4N-8162	D4N-8A62	D4N-8B62	D4N-8C62
	One-way roller arm lever (vertical)	1-conduit	M20[*1]	D4N-4172	D4N-4A72	D4N-4B72	–
	Adjustable roller lever, form lock (metal lever, resin roller)	1-conduit	M20[*1]	**D4N-412G**	**D4N-4A2G**	**D4N-4B2G**	–
			M12 connector	**D4N-912G**	**D4N-9A2G**	**D4N-9B2G**	–
	Adjustable roller lever, form lock (metal lever, rubber roller)	1-conduit	M20[*1]	**D4N-412H**	**D4N-4A2H**	**D4N-4B2H**	–
			M12 connector	**D4N-912H**	**D4N-9A2H**	**D4N-9B2H**	–

[*1.] Conduit sizes 1/2-14NPT, G1/2 and PG13.5 are also available.

bold = safety limit switch, mechanical form lock

Switches with two contacts and MBB contacts

MBB (Make Before Break) contacts have an overlapping structure, so that before the normally closed (NC) contact opens the normally open (NO) contact closes.

Actuator		Connection method		Order code	
				1NC/1NO (slow-action)	2NC/1NO (slow-action)
	Roller lever (resin lever, resin roller)	1-conduit	M20[*1]	D4N-4E20	D4N-4F20
			M12 connector	D4N-9E20	–
		2-conduit	M20[*1]	D4N-8E20	D4N-8F20
	Roller plunger	1-conduit	M20[*1]	D4N-4E32	D4N-4F32
			M12 connector	D4N-9E32	–
		2-conduit	M20[*1]	D4N-8E32	D4N-8F32
	One-way roller arm lever (horizontal)	1-conduit	M20[*1]	D4N-4E62	D4N-4F62
			M12 connector	D4N-9E62	–
		2-conduit	M20[*1]	D4N-8E62	D4N-8F62

[*1] Conduit sizes 1/2-14NPT, G1/2 and Pg13,5 are also available.

Specifications

Durability *1	**Mechanical**	15,000,000 operations min./Fork lever 10,000,000 operations min.
	Electrical	500,000 operations min. for a resistive load of 3 A at 250 VAC 300,000 operations min. for a resistive load of 10 A at 250 VAC
Operating speed		1 mm/s to 0.5 m/s (D4-1120)
Operating frequency		30 operations/minute max.
Minimum applicable load		Resistive load of 1 mA at 5 VDC (N-level reference value)
Protection against electric shock		Class II (double insulation)
Pollution degree (operating environment)		3 (EN60947-5-1)
Contact gap		Snap-action: 2x0.5 mm min Slow-action: 2x2 mm min
Conditional short-circuit current		100 A (EN60947-5-1)
Rated open thermal current (I_{th})		10 A (EN60947-5-1)
Ambient temperature		Operating: -30°C to 70°C with no icing
Degree of protection		IP67 (EN60947-5-1)

*1 The durability is for an ambient temperature of 5°C to 35°C and an ambient humidity of 40 to 70%. For more details, consult your Omron representative.

1NO/1NC contact (snap-action)

If metal deposition between mating contacts occurs on the NC contact side, they can be pulled apart by the shearing force and tensile force generated when part B of the safety cam or plunger engages part A of the movable contact blade. When the safety cam or plunger is moved in the direction of the arrow, the Limit Switch releases.

1. When metal deposition occurs.

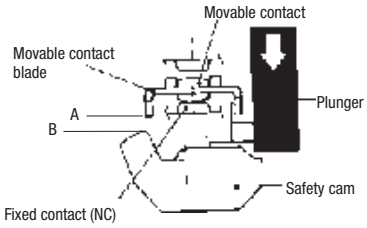

2. When contacts are being pulled apart.

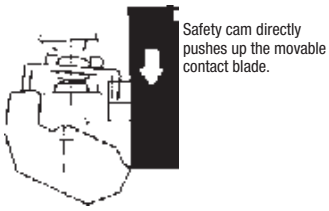

3. When contacts are completely pulled apart.

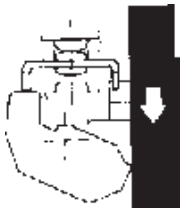

1NC/1NO contact (slow-action)

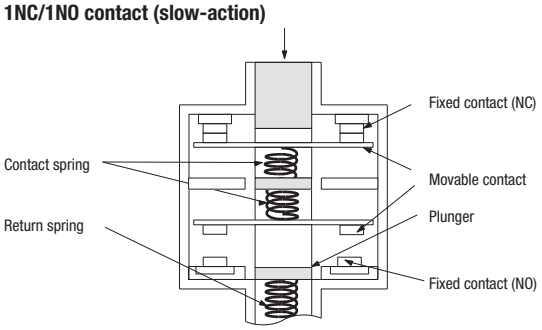

Conforms to EN60947-5-1 direct opening

When metal deposition occurs, the contacts are separated from each other by the plunger being pushed in.

2NC contact (slow-action)

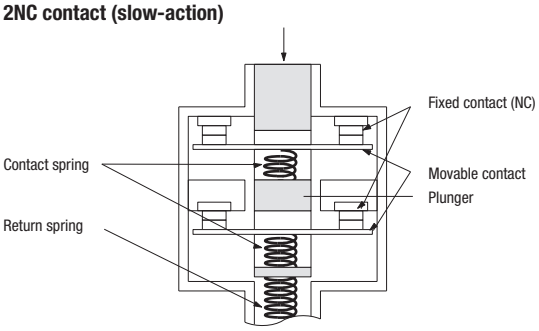

Conforms to EN60947-5-1

When metal deposition occurs, the contacts are separated from each other by the plunger being pushed in.

is marked on the product to indicate approval of direct opening.

Safety door hinge switch

D4NH safety-door hinge switches are available with one or two built-in contacts, shaft or arm lever actuator and various conduit types, e.g. M20.

- Direct opening mechanism
- Shaft or arm lever actuator
- Wide temperature range
- Metric conduit and M12 connector types are available

Ordering information

Switches

Actuator	Conduit size		Built-in switch mechanism		
			1NC/1NO (slow-action)	2NC (slow-action)	2NC/1NO (slow-action)
Shaft	1-conduit	M20	D4NH-4AAS	D4NH-4BAS	D4NH-4CAS
		M12 connector	D4NH-9AAS	D4NH-9BAS	–
	2-conduit	M20	D4NH-8AAS	D4NH-8BAS	D4NH-8CAS
Arm lever	1-conduit	M20	D4NH-4ABC	D4NH-4BBC	D4NH-4CBC
		M12 connector	D4NH-9ABC	D4NH-9BBC	–
	2-conduit	M20	D4NH-8ABC	D4NH-8BBC	D4NH-8CBC

Actuator	Conduit size		Built-in switch mechanism		
			3NC (slow-action)	1NC/1NO MBB (slow-action)	2NC/1NO MBB (slow-action)
Shaft	1-conduit	M20	D4NH-4DAS	D4NH-4EAS	D4NH-4FAS
		M12 connector	–	D4NH-9EAS	–
Arm lever	1-conduit	M20	D4NH-4DBC	D4NH-4EBC	D4NH-4FBC
		M12 connector	–	D4NH-9EBC	–

Note: Conduit types with G1/2, 1/2-14NPT and Pg13,5 are also available.

Specifications

Degree of protection		IP67 (EN60947-5-1)
Durability	**Mechanical**	1,000,000 operations min.
	Electrical	500,000 operations min. for a resistive load of 3 A at 250 VAC 300,000 operations min. for a resistive load of 10 A at 250 VAC
Operating speed		2 to 360°/s
Operating frequency		30 operations/minute max.
Protection against electric shock		Class II (double insulation)
Pollution degree (operating environment)		3 (EN60947-5-1)
Contact gap		Snap-action: 2x9.5 mm min Slow-action: 2x2 mm min
Conditional short-circuit current		100 A (EN60947-5-1)
Rated open thermal current (I_{th})		10 A (EN60947-5-1)
Ambient temperature		Operating: -30°C to 70°C with no icing

Safety-limit switch with manual reset

The D4NR family is a complete line-up of safety-limit switches with manual reset. They are available with one, two or three built-in contacts and a wide range of actuator types. To set up easy installation and maintenance, various conduit types, e.g. M20 and M12 connector types, are provided.

- Direct opening mechanism
- Various actuators
- Pull-reset switches
- Gold-plated contacts for handling micro loads
- Metric conduit types available

Ordering information

Switches		Conduit size		Order code	
				Built-in switch mechanism	
				1NC/1NO (slow-action)	2NC/1NO (slow-action)
	Roller lever (resin lever, resin roller)	1-conduit	M20	D4N-4A20R	D4N-4C20R
			M12 connector	D4N-9A20R	–
		2-conduit	M20	D4N-8A20R	D4N-8C20R
	Adjustable roller lever, form lock (metal lever, rubber roller)	1-conduit	M20	D4N-4A2HR	D4N-4C2HR
			M12 connector	D4N-9A2HR	–
		2-conduit	M20	D4N-8A2HR	D4N-8C2HR
	Plunger	1-conduit	M20	D4N-4A31R	D4N-4C31R
			M12 connector	D4N-9A31R	–
		2-conduit	M20	D4N-8A31R	D4N-8C31R
	Roller plunger	1-conduit	M20	D4N-4A32R	D4N-4C32R
			M12 connector	D4N-9A32R	–
		2-conduit	M20	D4N-8A32R	D4N-8C32R

Note: Conduit types with G1/2, 1/2-14NPT and Pg13,5 are also available.

Specifications

Degree of protection		IP67 (EN60947-5-1)
Durability	Mechanical	1,000,000 operations min.
	Electrical	500,000 operations min. for a resistive load of 3 A at 250 VAC 300,000 operations min. for a resistive load of 10 A at 250 VAC
Operating speed		1 mm/s to 0.5 m/s (D4N-1A20R)
Operating frequency		30 operations/minute max.
Protection against electric shock		Class II (double insulation)
Pollution degree (operating environment)		3 (EN60947-5-1)
Contact gap		Snap-action: 2×0.5 mm min Slow-action: 2×2 mm min
Rated open thermal current (I_{th})		10 A (EN60947-5-1)
Ambient temperature		Operating: -30°C to 70°C with no icing

SAFETY DOOR SWITCHES

Reliable Guard Monitoring

Monitoring of the correct position of a door or a guard is a key element in machine safety. Reliable detection of the door position and door locking protects workers. Our range of Non-contact switches is designed for applications in the packaging and food industry, fulfilling the requirement of wear and tear – free operation.

Non-contact door switches

F3S-TGR-N_C	see page 68

- Fit with all Omron Safety Relay Units and Controllers
- Operates behind stainless steel fittings
- Stainless steel housing

Reed contacts for high current:

F3S-TGR-N_R

page 70

Highest vibration tolerance:

D40A

page 92

SAFE CONTROL SYSTEMS FOR SAFETY DOOR SWITCHES

Safety Relay Units		Flexible Safety Units	Safety Controllers	
				
G9SB	**G9SA**	**G9SX**	**G9SP**	**NEA1**
see page 90	see page 91	see page 96	see page 100	see page 102

Key operated Switches	Door monitoring function	Door locking function
plastic housing:	**D4NS**  **page 66** M12 connector M20 conduit	**D4NL**  **page 63** Key holding force: 1300 N
slim housing:	**D4GS**  **Datasheet available on DVD** pre-wired cables	**D4GL**  **page 64** Key holding force: 1000 N
metal hosing:	**D4BS**  **page 67** M20 conduit	**D4BL**  **page 65** Key holding force: 700 N

Guard-lock safety door switch

The D4NL guard-lock safety-door switches are available with four or five built-in contacts. When locked, they have a key holding force of up to 1300N. Mechanical lock/solenoid release types and vice versa set up the complete range in combination with various conduit types, e.g. M20.

- Safety-door switch with electromagnetic lock or unlock mechanism
- Models with four or five built-in contacts
- Strong key holding force: 1300N
- For standard loads and micro loads
- Keys are compatible with D4GL and D4NS

Ordering information

Switches (with approved direct opening contacts)

For 110V and 230V version ask your local Omron representative

Lock and release types	Contact configuration	Conduit opening	Order code
Mechanical lock solenoid release	1NC/1NO + 1NC/1NO	M20	D4NL-4AFA-B
	1NC/1NO + 2NC	M20	D4NL-4BFA-B
	2NC + 1NC/1NO	M20	D4NL-4CFA-B
	2NC + 2NC	M20	D4NL-4DFA-B
	2NC/1NO + 1NC/1NO	M20	D4NL-4EFA-B
	2NC/1NO + 2NC	M20	D4NL-4FFA-B
	3NC + 1NC/1NO	M20	D4NL-4GFA-B
	3NC + 2NC	M20	D4NL-4HFA-B

Lock and release types	Contact configuration	Conduit opening	Order code
Solenoid lock mechanical release	1NC/1NO + 1NC/1NO	M20	D4NL-4AFG-B
	1NC/1NO + 2NC	M20	D4NL-4BFG-B
	2NC + 1NC/1NO	M20	D4NL-4CFG-B
	2NC + 2NC	M20	D4NL-4DFG-B
	2NC/1NO + 1NC/1NO	M20	D4NL-4EFG-B
	2NC/1NO + 2NC	M20	D4NL-4FFG-B
	3NC + 1NC/1NO	M20	D4NL-4GFG-B
	3NC + 2NC	M20	D4NL-4HFG-B

Note: - Conduit sizes of G1/2 and Pg 13,5 are also available.
- Solenoid: 24 VDC, Orange LED: 10 to 115 VAC/VDC

Operation keys (order separately)

Type		Order code
Horizontal mounting		D4DS-K1
Vertical mounting		D4DS-K2

Type		Order code
Adjustable mounting (horizontal)		D4DS-K3
Adjustable mounting (horizontal/vertical)		D4DS-K5

Specifications

Degree of protection		IP67 (EN60947-5-1) (This applies for the switch only. The degree of protection for the key hole is IP00.)
Durability[*1]	**Mechanical**	1,000,000 operations min.
	Electrical	500,000 operations min. for a resistive load of 3 A at 250 VAC
Operating speed		0.05 to 0.5 m/s
Operating frequency		30 operations/minute max.
Rated frequency		50/60 Hz
Contact gap		2x2 mm min
Direct opening force [*2]		60 N min. (EN60947-5-1)
Direct opening travel [*2]		10 mm min. (EN60947-5-1)
Holding force		1,300 N min.
Minimum applicable load		Resistive load of 1 mA at 5 VDC (N-level reference value)
Thermal current (I_{th})		10 A (EN60947-5-1)
Conditional short-circuit current		100 A (EN60947-5-1)
Pollution degree (operating environment)		3 (EN60947-5-1)
Protection against electric shock		Class II (double insulation)
Ambient temperature		Operating: -10°C to 55°C (with no icing or condensation)

[*1] The durability is for an ambient temperature of 5°C to 35°C and an ambient humidity of 40 to 70%. For more details, consult your Omron representative.
[*2] These figures are minimum requirements for safe operation.

Note: The above values are initial values.

Guard-lock safety door switch

The D4GL guard-lock safety-door switches are available with four or five built-in contacts. When locked, they have a key holding force of up to 1000 N. Mechanical lock/solenoid release types and vice versa set up the complete range in combination with various conduit types, e.g. M20.

- Slim safety-door switch with electromagnetic lock or unlock mechanism
- Models with four or five built-in contacts
- Strong key holding force: 1000 N
- For standard loads and micro loads
- Keys are compatible with D4NL and D4NS

Ordering information

Switches (with approved direct opening contacts)

Lock and release types	Contact configuration	Conduit size	Order code
Mechanical lock solenoid release	1NC/1NO + 1NC/1NO	M20	D4GL-4AFA-A
	1NC/1NO + 2NC	M20	D4GL-4BFA-A
	2NC + 1NC/1NO	M20	D4GL-4CFA-A
	2NC + 2NC	M20	D4GL-4DFA-A
	2NC/1NO + 1NC/1NO	M20	D4GL-4EFA-A
	2NC/1NO + 2NC	M20	D4GL-4FFA-A
	3NC + 1NC/1NO	M20	D4GL-4GFA-A
	3NC + 2NC	M20	D4GL-4HFA-A

Lock and release types	Contact configuration	Conduit size	Order code
Solenoid lock mechanical release	1NC/1NO + 1NC/1NO	M20	D4GL-4AFG-A
	1NC/1NO + 2NC	M20	D4GL-4BFG-A
	2NC + 1NC/1NO	M20	D4GL-4CFG-A
	2NC + 2NC	M20	D4GL-4DFG-A
	2NC/1NO + 1NC/1NO	M20	D4GL-4EFG-A
	2NC/1NO + 2NC	M20	D4GL-4FFG-A
	3NC + 1NC/1NO	M20	D4GL-4GFG-A
	3NC + 2NC	M20	D4GL-4HFG-A

Note: - conduit sizes of G1/2 and Pg13,5 are also available.
- solenoid: 24 VDC, orange/green LED: 24 VDC

Operation keys (order separately)

Type		Order code
Horizontal mounting		D4DS-K1
Vertical mounting		D4DS-K2

Type		Order code
Adjustable mounting (horizontal)		D4DS-K3
Adjustable mounting (horizontal/vertical)		D4DS-K5

Specifications

Degree of protection		IP67 (EN60947-5-1) (This applies for the switch only. The degree of protection for the key hole is IP00.)
Durability *1	**Mechanical**	1,000,000 operations min.
	Electrical	500,000 operations min. for a resistive load of 4 mA at 24 VDC; 150,000 operations min. for a resistive load of 1 A at 125 VAC in 2 circuits and 4 mA at 24 VDC in 2 circuits
Operating speed		0.05 to 0.5 m/s
Operating frequency		30 operations/minute max.
Rated frequency		50/60 Hz
Contact gap		2x2 mm min.
Direct opening force *2		60 N min. (EN60947-5-1)
Direct opening travel *3		10 mm min. (EN60947-5-1)
Holding force		1,000 N min.
Minimum applicable load		Resistive load of 4 mA at 24 VDC (N-level reference value)
Thermal current (I_{th})		2.5 A (EN60947-5-1)
Conditional short-circuit current		100 A (EN60947-5-1)
Pollution degree (operating environment)		3 (EN60947-5-1)
Protection against electric shock		Class II (double insulation)
Ambient temperature		Operating: -10°C to 55°C with no icing

*1 The durability is for an ambient temperature of 5°C to 35°C and an ambient humidity of 40 to 70%. For more details, consult your Omron representative.
*2 These figures are minimum requirements for safe operation.
*3 These figures are minimum requirements for safe operation.

Note: The above values are initial values.

Guard-lock safety door switch with metal housing

The D4BL guard-lock safety-door switches are available with three built-in contacts. They are mechanically locked when the key is inserted and have a solenoid release. An auxiliary release key ensures easy maintenance and unlocks the door in case of power failure.

- Automatically mechanical lock
- Auxiliary release key for easy maintenance
- Tough aluminium die-cast body
- Horizontal and vertical conduit opening
- Head direction can easily be changed

Ordering information

Switches

Lock method	Conduit size	Voltage for solenoid	Without indicator 1NC/1NO+ 1NC (slow-action)	With LED indicator 1NC/1NO+ 1NC (slow-action)	Without indicator 2NC+ 1NC (slow-action)	With LED indicator 2NC+ 1NC (slow-action)
Mechanical lock	PG13.5	24 VDC	D4BL-1CRA	D4BL-1CRA-A	D4BL-1DRA	D4BL-1DRA-A
		110 VAC	D4BL-1CRB	D4BL-1CRB-A	D4BL-1DRB	D4BL-1DRB-A
	M20	24 VDC	D4BL-4CRA	D4BL-4CRA-A	D4BL-4DRA	D4BL-4DRA-A
		110 VAC	D4BL-4CRB	D4BL-4CRB-A	–	–
Solenoid lock	Pg 13.5	24 VDC	D4BL-1CRG	D4BL-1CRG-A	D4BL-1DRG	D4BL-1DRG-A
	M20	24 VDC	–	D4BL-4CRG-A	–	–

Operation keys (order separately)

Type		Order code
Horizontal mounting		D4BL-K1
Vertical mounting		D4BL-K2

Type		Order code
Adjustable mounting (horizontal)		D4BL-K3

Specifications

Degree of protection	IP67 (EN60947-5-1)
Durability[*1]	Mechanical: 1,000,000 operations min. Electrical: 500,000 operations min. (10 A resistive load at 250 VAC)
Operating speed	0.05 to 0.5 m/s
Operating frequency	30 operations/min max.
Rated frequency	50/60 Hz
Operating characteristics	Direct opening force: 19.61 N min. (EN60947-5-1) Direct opening travel: 20 mm min. (EN60947-5-1) All stroke: 23 mm min.
Holding force	700 N min. (GS-ET-19)
Thermal current (I_{th})	10 A (EN60947-5-1)
Pollution degree (operating environment)	3 (EN60947-5-1)
Protection against electric shock	Class I (with ground terminal)
Ambient temperature	Operating: -10 to 55°C (with no icing)

[*1] The durability is for an ambient temperature of 5 to 35°C and an ambient humidity of 40 to 70%.

Note: The above values are initial values.

Solenoid coil characteristics

Item	24 VDC mechanical lock models	110 VAC mechanical lock models	24 VAC solenoid lock models
Rated operating voltage	24 VDC $^{+10\%}/_{-15\%}$ (100% ED)	110 VAC ±10% (50/60 Hz)	24 VDC $^{+10\%}/_{-15\%}$ (100% ED)
Current consumption	Approx. 300 mA	Approx. 98 mA	Approx. 300 mA

Indicator characteristics

Item	LED
Rated voltage	10 to 115 VAC/VDC
Current leakage	Approx. 1 mA
Color (LED)	Orange, green

Safety door switch with plastic housing

The D4NS line-up includes three-contact models with 2NC/1NC and 3NC contact forms in addition to the previous contact forms, 1NC/1NO and 2NC. Models with M12 connectors and conduit opening, such as M20, are also available.

- Line-up with three contacts: 2NC/1NC and 3NC contact forms
- Line-up with two contacts 1NC/1NO and 2NC
- M12 connector types available
- Standardised gold-clad contacts for high contact reliability
- Applicable for standard loads and micro loads

Ordering information

Switches (with approved direct opening contacts)

Type	Contact configuration		Conduit opening/connector	Order code
1-conduit	Slow-action	1NC/1NO	M20	D4NS-4AF
		2NC	M20	D4NS-4BF
		2NC/1NO	M20	D4NS-4CF
		3NC	M20	D4NS-4DF
	Slow-action MBB contact	1NC/1NO	M20	D4NS-4EF
		2NC/1NO	M20	D4NS-4FF
2-conduit	Slow-action	1NC/1NO	M20	D4NS-8AF
		2NC	M20	D4NS-8BF
		2NC/1NO	M20	D4NS-8CF
	Slow-action MBB contact	1NC/1NO	M20	D4NS-8EF
	Slow-action MBB contact	2NC/1NO	M20	D4NS-8FF
1-conduit, with connector	Slow-action	1NC/1NO	M12 connector	D4NS-9AF
		2NC	M12 connector	D4NS-9BF
	Slow-action MBB contact	1NC/1NO	M12 connector	D4NS-9EF

Note: Additionally conduit sizes G1/2, 1/2-14NPT and Pg13,5 are available.

Operation keys (order separately)

Type		Order code
Horizontal mounting		D4DS-K1
Vertical mounting		D4DS-K2

Type		Order code
Adjustable mounting (horizontal)		D4DS-K3
Adjustable mounting (horizontal/vertical)		D4DS-K5

Specifications

Degree of protection		IP67 (EN60947-5-1) (This applies for the switch only. The degree of protection for the key hole is IP00.)
Durability *1	**Mechanical**	1,000,000 operations min.
	Electrical	500,000 operations min. for a resistive load of 3 A at 250 VAC 300,000 operations min. for a resistive load of 10 A at 250 VAC
Operating speed		0.05 to 0.5 m/s
Operating frequency		30 operations/minute max.
Direct opening force *2		60 N min.
Direct opening travel *2		10 mm min.
Minimum applicable load		Resistive load of 1 mA at 5 VDC (N-level reference value)
Protection against electric shock		Class II (double insulation)
Pollution degree (operating environment)		3 (EN60947-5-1)
Contact gap		2×2 mm min
Conditional short-circuit current		100 A (EN60947-5-1)
Rated open thermal current (I_{th})		10 A (EN60947-5-1)
Ambient temperature		Operating: -30°C to 70°C with no icing

*1 The durability is for an ambient temperature of 5°C to 35°C and an ambient humidity of 40 to 70%. For more details, consult your Omron representative.
*2 These figures are minimum requirements for safe operation.

Note: The above values are initial values.

Safety door switch with metal housing

The D4BS line-up includes two-contact models with 1NC/1NO and 2NC in a robust metal housing. 1 or 3 conduit openings, such as M20 or PG13,5 are available.

- Robust metal housing
- Line-up with two contacts: 1NC/1NO and 2NC
- Standardised gold-clad contacts for high contact reliability
- Applicable for standard loads and micro loads

Ordering information

Switches

Type	Mounting direction	Conduit size	Order code	
			1NC/1NO (slow-action)	2NC (slow-action)
1-conduit	Front-side mounting	Pg13.5	D4BS-15FS	D4BS-1AFS
		M20	D4BS-45FS	D4BS-4AFS
3-conduit		Pg13.5	D4BS-55FS	D4BS-5AFS
		M20	D4BS-85FS	D4BS-8AFS

Operation keys (order separately)

Type		Order code
Horizontal mounting		D4BS-K1
Vertical mounting		D4BS-K2
Adjustable mounting (horizontal)		D4BS-K3

Specifications

Degree of protection[*1]	IP67 (EN60947-5-1)
Durability[*2]	Mechanical: 1,000,000 operations min. Electrical: 500,000 operations min. (10 A at 250 VAC, resistive load)
Operating speed	0.1 m/s to 0.5 m/s
Operating frequency	30 operations/min max.
Rated frequency	50/60 Hz
Contact gap	2×2 mm min.
Direct opening force[*3]	19.61 N min. (EN60947-5-1)
Direct opening travel[*3]	20 mm min. (EN60947-5-1)
Full stroke	23 mm min.
Conventional enclosed thermal current (I_{th})	20 A (EN60947-5-1)
Conditional short-circuit current	100 A (EN60947-5-1)
Pollution degree (operating environment)	3 (EN60947-5-1)
Protection against electric shock	Class I (with ground terminal)
Ambient temperature	Operating: -40 to 80°C (with no icing)

*1 Although the switch box is protected from dust, oil, or water penetration, do not use the D4BS in places where dust, oil, water, or chemicals may penetrate through the key hole on the head, otherwise switch damage or malfunctioning may occur.
*2 The durability is for an ambient temperature of 5°C to 35°C and an ambient humidity of 40 to 70%. Contact your Omron sales representative for more detailed information on other operating environments.
*3 These figures are minimum requirements for safe operation.

Note: The above values are initial values.

Non-contact switches for monitoring the status of guarding doors

Non-contact switches monitor the status of guarding doors. LED for easy diagnosis and stainless steel housing for high hygiene demands in the food industry are available

- Operates with all Omron safety controllers
- Operates behind stainless steel fittings
- Non-contact – no abrasion – no particles
- Screw-hole covers support hygienic design (NMPC)
- Conforms to safety categories up to 4 acc. EN 954-1, PDF-M acc. EN60947-5-3 and PLe acc. EN ISO13849-1

Ordering information

Elongated sensors

Cable connection	Contact configuration	Order code
2 m pre-wired	2NC/1NO	F3S-TGR-NLPC-21-02
5 m pre-wired	2NC/1NO	F3S-TGR-NLPC-21-05
10 pre-wired	2NC/1NO	F3S-TGR-NLPC-21-10
M12, 8-pin	2NC/1NO	F3S-TGR-NLPC-21-M1J8

Small sensors

Cable Ccnnection	Contact configuration	Order code
2 m pre-wired	2NC/1NO	F3S-TGR-NSMC-21-02
5 m pre-wired	2NC/1NO	F3S-TGR-NSMC-21-05
10 pre-wired	2NC/1NO	F3S-TGR-NSMC-21-10
M12, 8-pin	2NC/1NO	F3S-TGR-NSMC-21-M1J8

Miniature sensors

Cable connection	Contact configuration	Order code
2m pre-wired	2NC/1NO	F3S-TGR-NMPC-21-02
5m pre-wired	2NC/1NO	F3S-TGR-NMPC-21-05
10m pre-wired	2NC/1NO	F3S-TGR-NMPC-21-10
M12, 8-pin	2NC/1NO	F3S-TGR-NMPC-21-M1J8

Specifications

Mechanical data

Item	Model	Elongated sensor	Small sensor	Miniature sensor
Operating distance	OFF ➔ ON (Sao)	12 mm Close		8 mm Close
	ON ➔ OFF (Sar)	17 mm Open		12 mm Open
Actuator approach speed	Min. Max.	4 mm/s 1000 mm/s		
Operating temperature	–	-25°C to +80°C	-25°C to +105°C	-25°C to +80°C
Enclosure protection	Flying lead M12 connector	IP 67		
Material	–	Black Polycarbonate	Stainless steel 316	Black Polyester

Electrical data

Item		Model	Elongated sensor	Small sensor	Miniature sensor
Power supply		–	24 VDC ±15%		
Power consumption		Max.	50 mA		
Switching current		Min.	10 mA, 10 VDC		
Rated loads	NC contacts NO contact	Max.	100 mA, 24 VDC 100 mA, 24 VDC		
Output type		–	Electronic output (potential-free optocoupler output)		

Approved standards

EN standards certified by TÜV Rheinland
EN 954-1, EN ISO13849-1
EN 60204-1
EN/IEC 60947-5-3
UL 508, CSA C22.2
BS 5304
EN 1088-1 conformance

Wiring examples (Single head connection up to category 4 acc. EN954-1)

G9SA

Single sensor application with G9SA-301
(up to safety category 4 acc. EN954-1)

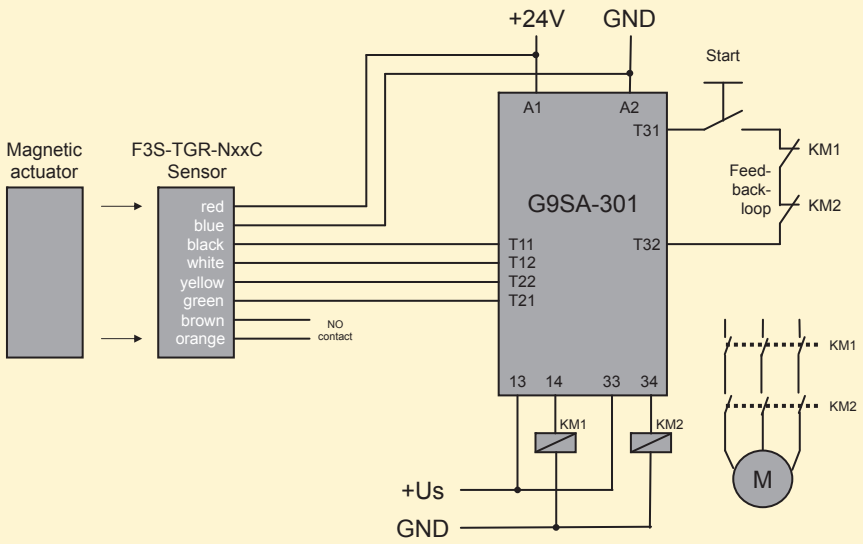

Non-contact switches for monitoring the status of guarding doors

Non-contact switches monitor the status of guarding doors. LED for easy diagnosis and stainless steel housing for high hygiene demands in the food industry are available.

- Operates with all Omron safety controllers
- Operates behind stainless steel fittings
- Non-contact – no abrasion – no particles
- Screw-hole covers support hygienic design (NMPR)
- Conforms to safety categories up to 4 acc. EN 954-1, PDF-M acc. EN60947-5-3 and PLe acc. EN ISO13849-1

Ordering information

Elongated sensors

Cable connection	Contact configuration	Order code
2 m pre-wired	2NC/1NO	F3S-TGR-NLPR-21-02
5 m pre-wired	2NC/1NO	F3S-TGR-NLPR-21-05
10 pre-wired	2NC/1NO	F3S-TGR-NLPR-21-10
M12, 8-pin	2NC/1NO	F3S-TGR-NLPR-21-M1J8

Small sensors

Cable connection	Contact configuration	Order code
2 m pre-wired	2NC/1NO	F3S-TGR-NSMR-21-02
5 m pre-wired	2NC/1NO	F3S-TGR-NSMR-21-05
10 pre-wired	2NC/1NO	F3S-TGR-NSMR-21-10
M12, 8-pin	2NC/1NO	F3S-TGR-NSMR-21-M1J8

Miniature sensors

Cable connection	Contact configuration	Order code
2m pre-wired	2NC/1NO	F3S-TGR-NMPR-21-02
5m pre-wired	2NC/1NO	F3S-TGR-NMPR-21-05
10m pre-wired	2NC/1NO	F3S-TGR-NMPR-21-10
M12, 8-pin	2NC/1NO	F3S-TGR-NMPR-21-M1J8

Specifications

Mechanical data

Item	Model	Elongated sensor	Small sensor	Miniature sensor
Operating distance	OFF ➔ ON (Sao)	10 mm Close		12 mm Close
	ON ➔ OFF (Sar)	22 mm Open		20 mm Open
Actuator approach speed	Min. Max.	4 mm/s 1000 mm/s		
Operating temperature	–	-25°C to +80°C	-25°C to +105°C	-25°C to +80°C
Enclosure protection	Flying lead M12 connector	IP 67		
Material	–	Black Polycarbonate	Stainless steel 316	Black Polyester

Electrical data

Item		Model	Elongated sensor	Small sensor	Miniature sensor
Contact release time		Max.	2 ms		
Initial contact resistance		Max.	50 mΩ		500 mΩ
Switching current		Min.	1 mA, 10 VDC		10 mA, 10 VDC
Rated loads	NC contacts NO contact	Max.	1 A, 250 VAC 0.2 A, 24 VDC		0.5 A, 250 VAC 0.2 A, 24 VDC

Approved standards

EN standards certified by TÜV Rheinland
EN 954-1, EN ISO13849-1
EN 60204-1
EN/IEC 60947-5-3
UL 508, CSA C22.2
BS 5304
EN 1088-1 conformance

Wiring examples (Single head connection up to category 4 acc. EN954-1)

G9SA

Single sensor application with G9SA-301
(up to safety category 4 acc. EN954-1)

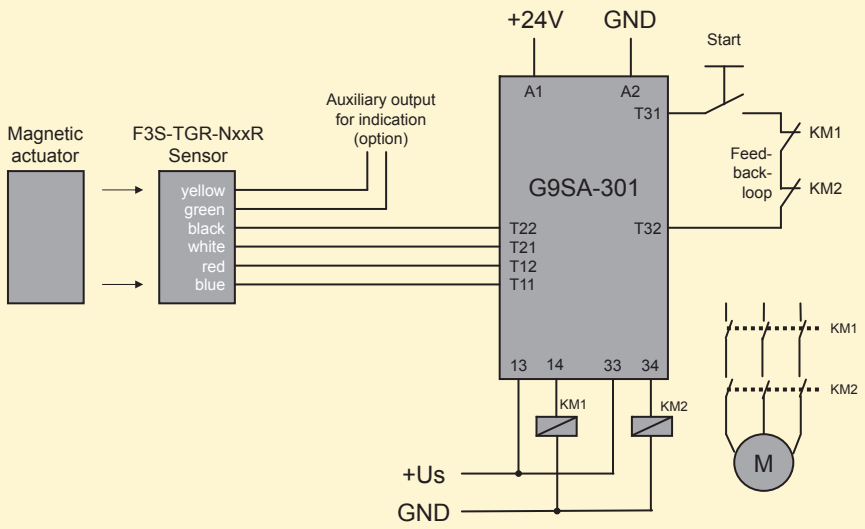

SAFETY SENSORS

Total consistency - across the board

Safety Sensors are the first choice in safeguarding workplaces where persons and machines cooperate. Built-in intelligence stops the machine in conditions that are dangerous for the worker. Our F3S-TGR-CL range offers safety light curtains with included safe control functions for Finger-, hand- and body protection, all using the same concept of wiring, installation and setup for simplicity in daily use and maintenance.

F3S-TGR-safety light curtains

F3S-TGR-CL	see page 79

- Protective height 150mm to 2400mm
- Operating distance:
  up to 6m for 14mm resolution
  up to 14m for 35mm resolution
  up to 12m for active/passive body protection models
  up to 50m for active/active body protection models
- Control functions included:
  X-, T- and L-muting
  fixed and floating blanking
  single- and double break operation
  pre-reset access control
- Certified as type 2 and type 4 acc. EN61496 and PLc and PLe acc. EN ISO 13849.

SAFE CONTROL SYSTEMS FOR SAFETY SENSORS

Safety Relay Units		Flexible Safety Units	Safety Controllers		Multicasading
					
G9SB	G9SA	G9SX	G9SP	NEA1	MS4800/MS2800
see page 90	see page 91	see page 96	see page 100	see page 102	see page 75

	Type 2	Type 3	Type 4
robust housing, finger- and hand-protection	MS2800  page 75		MS4800  page 75
slim housing, finger- and hand-protection	F3S-B  page 74		F3SN  page 77
presence sensing, collission avoidance for AGVs, 270° safety laser scanner		OS32C  page 85	

DEDICATED APPLICATIONS

IP67 washing / cleaning	ATEX (explosion proof housing)	Muting indication	Integrated Muting bi-directional	Single beam M18 housing	Muting with external controller
					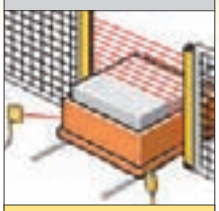
MS4800/MS2800	MS4800/MS2800	LU5/LU7 MP/LE	F3S-TGR-CL_-K_ F3S-TGR-CL_-K_C	E3FS	F3SP-U4P
see page 75	see page 75	see page 41-50	see page 79	see page 83	see page 84

Category-2 safety light curtain

The F3S-B is a category-2 safety light curtain with resolutions of 30, 55 and 80 mm. An operating range of up to 5 m and protective heights from 300mm to 1,650 mm are provided with a very small dead zone.

- Sensing distance up to 5 m
- LEDs for easy alignment and diagnosis
- Series connection of two sensors is possible
- Category-2 sensor complying with EN 61496-1, EN 954-1 and EN ISO 13849-1

Ordering information

Optical resolution	No. of optical axes	Protective height	Order code
30 mm	12	300 mm	F3S-B122P
	18	450 mm	F3S-B182P
	24	600 mm	F3S-B242P
	30	750 mm	F3S-B302P
	36	900 mm	F3S-B362P
	42	1,050 mm	F3S-B422P
	48	1,200 mm	F3S-B482P
	54	1,350 mm	F3S-B542P
	60	1,500 mm	F3S-B602P
	66	1,650 mm	F3S-B662P
55 mm	6	300 mm	F3S-B065P
	9	450 mm	F3S-B095P
	12	600 mm	F3S-B125P
	15	750 mm	F3S-B155P
	18	900 mm	F3S-B185P

Optical resolution	No. of optical axes	Protective height	Order code
55 mm	21	1,050 mm	F3S-B215P
	24	1,200 mm	F3S-B245P
	27	1,350 mm	F3S-B275P
	30	1,500 mm	F3S-B305P
	33	1,650 mm	F3S-B335P
80 mm	4	300 mm	F3S-B047P
	6	450 mm	F3S-B067P
	8	600 mm	F3S-B087P
	10	750 mm	F3S-B107P
	12	900 mm	F3S-B127P
	14	1,050 mm	F3S-B147P
80 mm	16	1,200 mm	F3S-B167P
	18	1,350 mm	F3S-B187P
	20	1,500 mm	F3S-B207P
	22	1,650 mm	F3S-B227P

Specifications

Item	F3S-B___P *1 Stand-alone			F3S-BM___P__ *1 Master unit for series connection			F3S-BS___ *1 Slave unit for series connection		
Sensor type	Type 2 Safety Light Curtain								
Optical-axis pitch	25 mm	50 mm	75 mm	25 mm	50 mm	75 mm	25 mm	50 mm	75 mm
Optical resolution (Detection capability)	Non-transparent: In diameter								
	30 mm	55 mm	80 mm	30 mm	55 mm	80 mm	30 mm	55 mm	80 mm
Protective height	300/450/600/750/900/1,050/1,200/1,350/1,500/1,650 mm						300/450/600/750 mm		
Detection distance	0.3 to 5.0 m								
Response time	ON to OFF 20 ms to 45ms (stand-alone) ON to OFF 20 ms to 65ms (series connection)								
Supply voltage (Vs)	24 VDC ±20% (including 5 Vp-p ripple)								
Current consumption	400 mA max. (under no-load conditions)								
Light source	Infrared LED (880 nm wavelength).								
Effective aperture angle	Within ±5° for the emitter and receiver at a detection distance of at least 3 m according to IEC 61496-2								
Control output	Two PNP transistor outputs, load current 200 mA max.								
Instability output	PNP transistor output (non safety output)								
Protection circuit	Output short-circuit protection, power supply reverse connection protection								
External test function	Mode selection by connecting "External test input" line to: Active: 17 VDC to Vs, 10 mA max. duration time at least 15 ms Inactive: No connection or 0 to 2.5 VDC, 2 mA max.								
Relay monitoring function (optional)	Default inactive, selectable with F39-U1E								
Start interlock function (optional)	Default inactive, selectable with F39-U1E								
Blanking function (optional)	Default inactive, selectable with F39-U1E								
Connection method	For extension cable: 8 pins, M12 connector For series connection cable: 6 pins, M12 connector								
Ambient temperature	Operating: -10°C +55°C (with no icing or condensation)								
Degree of protection	IP65 (IEC60529)								
Size (cross section)	30x40 mm								

*1 For detailed type names and optical specifications, see „Type Naming Rule"

Category 4 / 2 safety light curtain

The MS4800 and MS2800 family of safety light curtain provides simplicity in mounting, configuring, daily use and maintenance by providing a:

- Sensing distance up to 20m for 30mm resolution and 7 m for 14mm resolution
- LED bar for easy alignment and diagnosis
- DIP-switch setup for blanking, muting and optical coding
- Category 4 / 2 sensor complying with EN 61496-1
- All-in-one M12 connection and mounting concept with robust housing
- Multicascadable up to 4 sets

Ordering information

MS2800 Safety Category 2

Connection features	Standard				Master				Slave	
Standard Standalone operation										
Master Series connection, muting										
Slave Series connection only										
	MS2800S-				MS2800FS-				MS2800F-	
Function Set	Basic		Advanced		Basic		Advanced			
Basic Interlock, restart, EDM, 2 optical channels, integrated alignment tool										
Advanced Muting, blanking (fixed/floating)										
	MS2800S-EB-		MS2800S-EA-		MS2800FS-EB-		MS2800FS-EA-		MS2800F-E-	
Resolution	14 mm	30 mm	14 mm	30 mm	14 mm	30 mm	14 mm	30 mm	14 mm	30 mm
14 mm finger protection										
30 mm hand protection	MS2800S-EB-014-	MS2800S-EB-030-	MS2800S-EA-014-	MS2800S-EA-030-	MS2800FS-EB-014-	MS2800FS-EB-030-	MS2800FS-EA-014-	MS2800FS-EA-030-	MS2800F-E-014-	MS2800F-E-030-
Length										
240 mm … 2120 mm in	280 … 1800	280 … 2120	280 … 1800	280 … 2120	280 … 1800	280 … 2120	280 … 1800	280 … 2120	240 … 1280	280 … 2120
40 mm increments										

MS4800 Safety Category 4

Connection features	Standard				Master				Slave	
Standard Standalone operation										
Master Series connection, muting										
Slave Series connection only										
	MS4800S-				MS4800FS-				MS4800F-	
Function Set	Basic		Advanced		Basic		Advanced			
Basic Interlock, restart, EDM, 2 optical channels, integrated alignment tool										
Advanced Muting, blanking (fixed/floating)										
	MS4800S-EB-		MS4800S-EA-		MS4800FS-EB-		MS4800FS-EA-		MS4800F-E-	
Resolution	14mm	30mm	14mm	30mm	14mm	30mm	14mm	30mm	14mm	30mm
14mm finger protection										
30mm hand protection	MS4800S-EB-014-	MS4800S-EB-030-	MS4800S-EA-014-	MS4800S-EA-030-	MS4800FS-EB-014-	MS4800FS-EB-030-	MS4800FS-EA-014-	MS4800FS-EA-030-	MS4800F-E-014-	MS4800F-E-030-
Length										
240mm … 2120mm in	280 ... 1800	280 ... 2120	280 ... 1800	280 ... 2120	280 ... 1800	280 ... 2120	280 ... 1800	280 ... 2120	240 ... 1280	280 ... 2120
40mm increments										

Examples	**MS2800S-EB-030-1000**	**MS4800FS-EA-014-1200**	**MS4800F-E-014-600**
	Standalone operation Basic function set 30mm resolution 1000mm protective height	Series connection model Advanced function set 14mm resolution 1200mm protective height	Slave operation 14mm resolution 600mm protective height

Specifications

Model	MS4800_-E_-___-____	MS2800_-E_-___-____
Sensor type	Type 4	Type2
Normal operating range Reduced range (DIP-switch 6)	14 mm resolution: 0.3 - 7 m, 30 mm resolution: 0.3 - 20 m 14 mm resolution: 0.3 - 3 m, 30 mm resolution: 0.3 - 8 m	
Beam pitch	14 mm resolution: 10 mm; 30 mm resolution: 20 mm	
Protective height	14 mm resolution: 280 - 1800 mm; 30 mm resolution: 240 - 2120 mm	
Detection capability	14 mm resolution: 14 mm non-transparent; 30 mm resolution: 30 mm non-transparent	
Effective aperture angle (EAA)	Within ±2,5°	Within ±5,0°
	for the emitter and receiver at a detection distance of at least 3m according to IEC61496-2	
Light source	Infrared LED's (880 nm), Power dissipation: 180 mW, Class 1 per EN60825-1	
Supply voltage (Vs)	24 VDC ±20%, according EN/IEC60204, able to cover a drop of voltage of at least 20 msec	
OSSD	Two safety related PNP transistor output, load current 625 mA max.*1, short circuit protection	
Auxiliary output (non safety output)	One PNP output sourcing 100mA @ 24VDC. This output follows the OSSD's	
Output operation mode	OSSD output: Light-ON	
Test functions	Self-test (after power ON and during operation)	
Safety-related functions	All versions: Auto reset/interlock with manual reset, EDM (external device monitoring) advanced versions only: fixed blanking, floating blanking, muting	
Response time	ON to OFF: 14 to 59 ms	
Ambient light intensity	Incandescent lamp: 3000 lx max. (light intensity on the receiver surface)	
Ambient temperature	Operating: -10°C to +55°C, storage: -25°C to +70°C (without icing or condensation)	
Degree of protection	IP65 (IEC60529)	
Connection methode	Flexible cable with M 12 connection: receiver: 8 pins, transmitter: 5 pins	
Materials	Case: Polyurethane powder painted aluminium, cap: polycarbonate, front window: acrylic, mounting brackets: cold rolled steel	
Size (cross section)	39 x 50 mm	
Receiver indicator lights	Individual Beam Indicator (IBI), interlock, blanking activ, RUN and STOP state, error codes	
Transmitter indicator lights	ON, OFF, failure	
AOPD (ESPE)	Type4 acc. IEC 61496-1	Type2 acc. IEC 61496-1
Suitable for safety control systems	Cat. 4 acc. EN954-1, PLe acc. EN ISO 13849-1	Cat. 2 acc. EN954-1, PLc acc. EN ISO 13849-1
Safety Integrity Level	SIL 3 according IEC 61508	
PFH	$3{,}5 \times 10^{-8}$	

*1 Up to 12 m we recommend to use the F39-JMR cables, to use longer cables and a current of 625 mA the F39-JMR cables are necessary.

Connection example

Using a manual restart and an external device monitoring

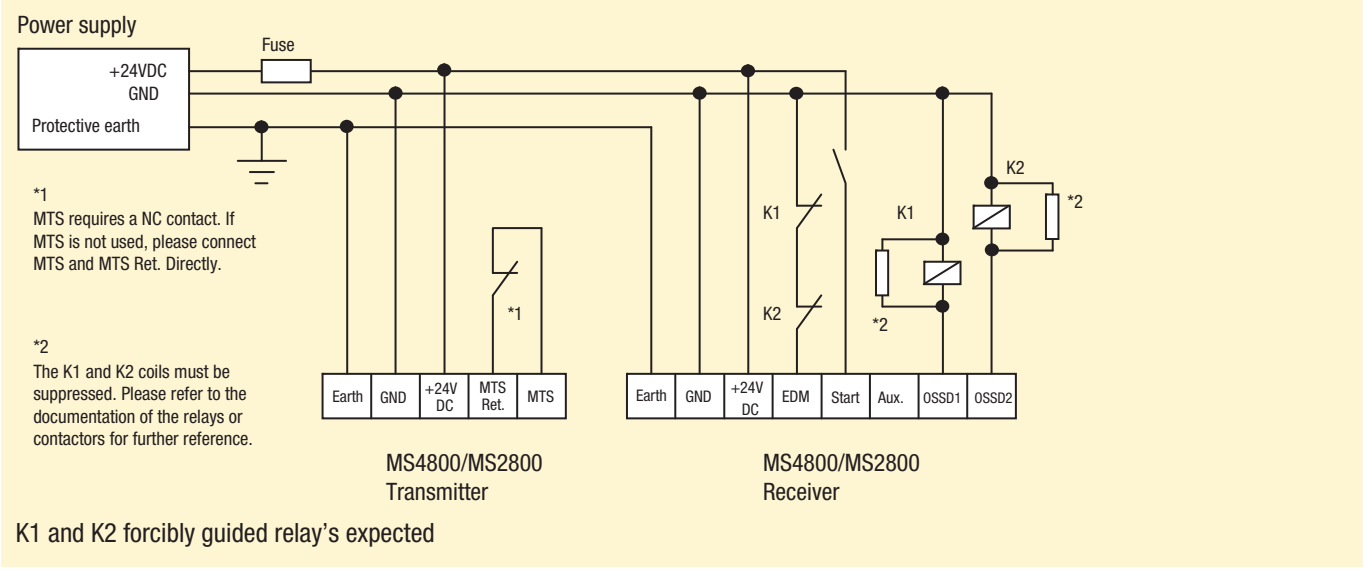

Category-4 safety light curtain/ multi-beam safety sensor

The F3SN family is a category-4 safety light curtain with resolutions of 14, 25, 30 and 60 mm. An operating range of up to 10 m and protective heights from 189 to 1,822 mm are provided with no dead zone.

- Detection height = sensor length
- Sensing distance up to 7 m (14 mm resolution) and 10 m for all other types
- LED bar for easy alignment and diagnosis
- Blanking function by using setup console
- Category-4 sensor complying with EN 61496-1

Ordering information

Safety light curtains

Minimum detection object	Sensing distance	Series connection, connector	Order code*1
14 mm dia. (finger protection)	0.2 to 7 m	No	F3SN-A____P14 F3SN-A____P14H
		Yes	F3SN-A____P14H-01
25 mm dia. (hand protection)	0.2 to 10 m	No	F3SN-A____P25
		Yes	F3SN-A____P25-01
40 mm dia. (for presence protection)	0.2 to 10 m	No	F3SN-A____P40
		Yes	F3SN-A____P40-01
70 mm dia. (for presence detection)	0.2 to 10 m	No	F3SN-A____P70
		Yes	F3SN-A____P70-01

*1 ____ in the model name indicates the detection width (mm).

List of safety light curtains

F3SN-A____P14, F3SN-A____P14-01, F3SN-A____P14H-01

Detection height	Number of optical axes	Order code
207	23	F3SN-A0207P14 (-01)
297	33	F3SN-A0297P14 (-01)
405	45	F3SN-A0405P14 (-01)
495	55	F3SN-A0495P14 (-01)
603	67	F3SN-A0603P14 (-01)
711	79	F3SN-A0711P14 (-01)
801	89	F3SN-A0801P14 (-01)
909	101	F3SN-A0909P14 (-01)
999	111	F3SN-A0999P14 (-01)
1,107	123	F3SN-A1107P14 (-01)
1,197	133	F3SN-A1197P14H(-01)
1,359	151	F3SN-A1359P14H(-01)
1,503	167	F3SN-A1503P14H(-01)
1,611	179	F3SN-A1611P14H(-01)

F3SN-A____P25, F3SN-A____P25-01

Detection height	Number of optical axes	Order code
307	19	F3SN-A0307P25 (-01)
457	29	F3SN-A0457P25 (-01)
607	39	F3SN-A0607P25 (-01)
907	59	F3SN-A0907P25 (-01)
1,057	69	F3SN-A1057P25 (-01)
1,207	79	F3SN-A1207P25 (-01)
1,357	89	F3SN-A1357P25 (-01)
1,507	99	F3SN-A1507P25 (-01)
1,657	109	F3SN-A1657P25 (-01)
1,807	119	F3SN-A1807P25 (-01)

Note: Highlighted products are preferred stock types, other detection heights are available.

Accessories (order separately)

Setting console

Order code	Accessories
F39-MC11	One branching connector, one connector cap, 2 m cable, instruction manual

Specifications

Item	Stand-alone	F3SN-A____P14 *1 *3	F3SN-A____P25 *1	F3SN-A____P40 *1	F3SN-A____P70 *1
	Series connection	F3SN-A____P14-01 *1 *2 *3	F3SN-A____P25-01 *1	F3SN-A____P40-01 *1	F3SN-A____P70-01*1
Sensor type		Type 4 Safety Light Curtain			
Operating range		0.2 to 7 m	0.2 to 10 m		
Beam pitch (P)		9 mm	15 mm	30 mm	60 mm
Protective height (PH)		189 to 1611 mm PH = n × P	217 to 1822 mm PH = (n – 1) × P + 37	217 to 1807 mm PH = (n – 1) × P + 37	277 to 1777 mm PH = (n – 1) × P + 37
Outermost beam gap		–			
Detection capability		Non-transparent: 14 mm in diameter	Non-transparent: 25 mm in diameter	Non-transparent: 40 mm in diameter	Non-transparent: 70 mm in diameter
Effective aperture angle (EAA)		Within ±2.5° for the emitter and receiver at a detection distance of at least 3 m according to IEC 61496-2			
Light source		Infrared LED (870 nm)			
Supply voltage (Vs)		24 VDC ±10% (ripple p-p 10% max.)			
OSSD		Two PNP transistor outputs, load current 300 mA max.			
Auxiliary output (non-safety output)		One PNP transistor output, load current 50 mA max.			
External indicator output (non-safety output) *4		One PNP transistor output, load current 40 mA max.			
Output operation mode		OSSD output: Light-ON Auxiliary output: Dark-ON (can be changed by the F39-MC11) External indicator output: Light-ON (can be changed by the F39-MC11) *4			
Input voltage		For test input, interlock selection input, reset input, and external relay monitor input voltages; ON voltage: 9 to 24 V (with a sink current of 3 mA max.), OFF voltage: 0 to 1.5 V or open			
Test functions		Self-test (after power ON, and during operation, one cycle during response time) External test (light emission stop function by test input)			
Safety-related functions		Auto reset/manual reset (interlock) *5 EDM (external device monitoring) Fixed blanking *6 Floating blanking *6			
Response time		ON to OFF: 10 to 15.5 ms max., 19,5 ms max. for 179 beams			
Ambient light intensity		Incandescent lamp: 3000 lx max. (light intensity on the receiver surface) Sunlight: 10000 lx max. (light intensity on the receiver surface)			
Ambient temperature		Operating: -10°C +55°C, storage: -30°C +70°C (with no icing or condensation)			
Degree of protection		IP65 (IEC60529)			
Connection method		M12 connector (8 pins)			
Materials		Case: Aluminum, cap: Zinc die-cast, optical cover: PMMA (acrylic resin)			
Size (cross section)		30x30 mm			

*1 The 4 digits in ____ in the model number represent the protective height. Use the formula given in the information on protective height specifications to calculate the height. For example, if the beam gap is 9 mm, and the No. of beams is 21, the protective height will be 9×21 = 189 mm. The model with this protective height is F3SN-A0189P14.
*2 F3SN-A____P14-01 is a customized model. Consult with your Omron representative when ordering this model.
*3 For sizes above 1,125 mm add „H“ after P14, e.g. F3SN-A1143P14H. Ask for supplemental manual.
*4 Models ending in -01 only.
*5 For the factory setting, the manual reset mode is set to the “start/restart” interlock. Using the F39-MC11 can select either the start interlock or the restart interlock.
*6 For the factory setting, the function is not set. It can be enabled with the F39-MC11.

Connection

Using a manual reset function and an external device monitoring function

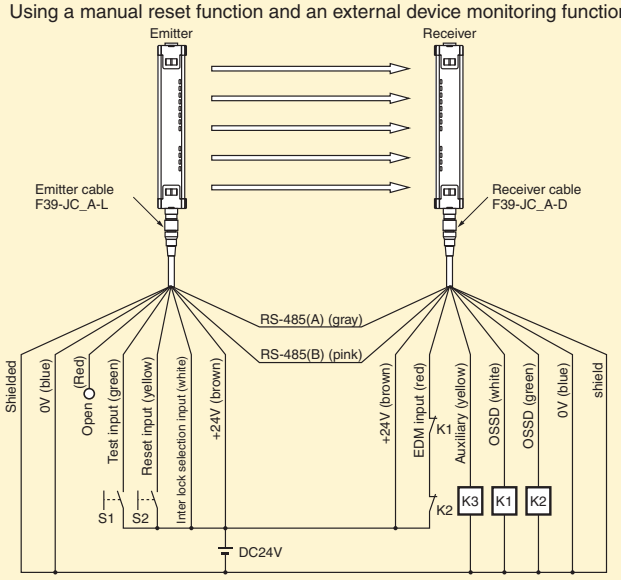

When using a auto reset function

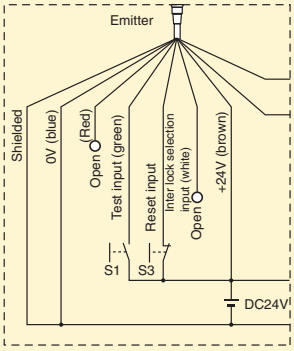

S1: External test switch
S2: Interlock/lockout reset switch
S3: Lock-out reset switch if the switch is not needed, connect to 24 VDC)
K1, K2: Relays for control of dangerous parts of machine.
K3: Load, PLC, etc. (for monitor)

Note: If you do not intend to use the external relay monitor, connect the auxiliary output that is set for dark: ON operation to the external relay monitor input, or use F39-MC11 to disable the external relay monitor function.

Multi-beam, finger- and hand protection safety sensor

The multi-beam sensors are available in Category 2 (PL c) and Category 4 (PL e) with integrated muting function. The finger- and hand protection models are available in Category 2 (PL c) and Category 4 (PL e) with integrated safety control functions.

- Type 2/Type 4 sensor complying with EN 61496-1
- Family concept in wiring and mounting

Multi-beam models

- Sensing distance up to 50 m
- DIP-switch setup for muting, pre-reset, interlock function and optical coding
- Muting function and muting lamp integrated

Finger- and hand protection models

- Sensing distance up to 0.2 m...6 m (14 mm) and 0.2 m...14 m (35 mm)
- DIP-switch setup for blanking, interlock function, muting and optical coding
- Floating blanking and fixed blanking supported

Ordering information multi-beam safety sensors

Long-range active/active systems

F3S-TGR-CL2_-K_ (Type 2)

Number of optical axes	Sensing distance	Beam pitch	Feature set*1	Order code
2	0.5 m … 40 m	500	Advanced	F3S-TGR-CL2A-K2-500
2	0.5 m … 40 m	500	Basic	F3S-TGR-CL2B-K2-500
3	0.5 m … 40 m	400	Advanced	F3S-TGR-CL2A-K3-800
3	0.5 m … 40 m	400	Basic	F3S-TGR-CL2B-K3-800
4	0.5 m … 40 m	300	Advanced	F3S-TGR-CL2A-K4-900
4	0.5 m … 40 m	300	Basic	F3S-TGR-CL2B-K4-900
4	0.5 m … 40 m	400	Advanced	F3S-TGR-CL2A-K4-1200
4	0.5 m … 40 m	400	Basic	F3S-TGR-CL2B-K4-1200
2	25 m … 50 m	500	Advanced	F3S-TGR-CL2A-K2-500-LD
2	25 m … 50 m	500	Basic	F3S-TGR-CL2B-K2-500-LD
3	25 m … 50 m	400	Advanced	F3S-TGR-CL2A-K3-800-LD
3	25 m … 50 m	400	Basic	F3S-TGR-CL2B-K3-800-LD
4	25 m … 50 m	300	Advanced	F3S-TGR-CL2A-K4-900-LD
4	25 m … 50 m	300	Basic	F3S-TGR-CL2B-K4-900-LD
4	25 m … 50 m	400	Advanced	F3S-TGR-CL2A-K4-1200-LD
4	25 m … 50 m	400	Basic	F3S-TGR-CL2B-K4-1200-LD

F3S-TGR-CL4_-K_ (Type 4)

Number of optical axes	Sensing distance	Beam pitch	Feature set*1	Order code
2	0.5 m … 40 m	500	Advanced	F3S-TGR-CL4A-K2-500
2	0.5 m … 40 m	500	Basic	F3S-TGR-CL4B-K2-500
3	0.5 m … 40 m	400	Advanced	F3S-TGR-CL4A-K3-800
3	0.5 m … 40 m	400	Basic	F3S-TGR-CL4B-K3-800
4	0.5 m … 40 m	300	Advanced	F3S-TGR-CL4A-K4-900
4	0.5 m … 40 m	300	Basic	F3S-TGR-CL4B-K4-900
4	0.5 m … 40 m	400	Advanced	F3S-TGR-CL4A-K4-1200
4	0.5 m … 40 m	400	Basic	F3S-TGR-CL4B-K4-1200
2	25 m … 50 m	500	Advanced	F3S-TGR-CL4A-K2-500-LD
2	25 m … 50 m	500	Basic	F3S-TGR-CL4B-K2-500-LD
3	25 m … 50 m	400	Advanced	F3S-TGR-CL4A-K3-800-LD
3	25 m … 50 m	400	Basic	F3S-TGR-CL4B-K3-800-LD
4	25 m … 50 m	300	Advanced	F3S-TGR-CL4A-K4-900-LD
4	25 m … 50 m	300	Basic	F3S-TGR-CL4B-K4-900-LD
4	25 m … 50 m	400	Advanced	F3S-TGR-CL4A-K4-1200-LD
4	25 m … 50 m	400	Basic	F3S-TGR-CL4B-K4-1200-LD

Short-range active/passive systems

F3S-TGR-CL2_-K_C (Type 2)

Number of optical axes	Sensing distance	Beam pitch	Feature set*1	Order code
2	0.5 m … 12 m	500	Advanced	F3S-TGR-CL2A-K2C-500
2	0.5 m … 12 m	500	Basic	F3S-TGR-CL2B-K2C-500
3	0.5 m … 8 m	400	Advanced	F3S-TGR-CL2A-K3C-800
3	0.5 m … 8 m	400	Basic	F3S-TGR-CL2B-K3C-800
4	0.5 m … 7 m	300	Advanced	F3S-TGR-CL2A-K4C-900
4	0.5 m … 7 m	300	Basic	F3S-TGR-CL2B-K4C-900
4	0.5 m … 7 m	400	Advanced	F3S-TGR-CL2A-K4C-1200
4	0.5 m … 7 m	400	Basic	F3S-TGR-CL2B-K4C-1200

F3S-TGR-CL4_-K_C (Type 4)

Number of optical axes	Sensing distance	Beam pitch	Feature set*1	Order code
2	0.5 m … 12 m	500	Advanced	F3S-TGR-CL4A-K2C-500
2	0.5 m … 12 m	500	Basic	F3S-TGR-CL4B-K2C-500
3	0.5 m … 8 m	400	Advanced	F3S-TGR-CL4A-K3C-800
3	0.5 m … 8 m	400	Basic	F3S-TGR-CL4B-K3C-800
4	0.5 m … 7 m	300	Advanced	F3S-TGR-CL4A-K4C-900
4	0.5 m … 7 m	300	Basic	F3S-TGR-CL4B-K4C-900
4	0.5 m … 7 m	400	Advanced	F3S-TGR-CL4A-K4C-1200
4	0.5 m … 7 m	400	Basic	F3S-TGR-CL4B-K4C-1200

*1. Feature set: Basic: Manual/automatic restart, coding
Advanced: Basic + Muting + Pre-reset

Ordering information finger- and hand protection safety sensors

Safety category	Feature set*2	Resolution	Length	Order code
2	Basic	14 mm	150 mm…2400 mm	F3S-TGR-CL2B-014-
		35 mm		F3S-TGR-CL2B-035-
	Advanced	14 mm		F3S-TGR-CL2A-014-
		35 mm		F3S-TGR-CL2A-035-
4	Basic	14 mm		F3S-TGR-CL4B-014-
		35 mm		F3S-TGR-CL4B-035-
	Advanced	14 mm		F3S-TGR-CL4A-014-
		35 mm		F3S-TGR-CL4A-035-

*2. Feature set: Basic: Manual/automatic restart, coding
Advanced: Blanking functions + muting + pre-reset

Specifications

Multi-beam safety sensors

Item	F3S-TGR-CL2_-K_	F3S-TGR-CL4_-K_
Sensor Type	Type 2	Type 4
Operating range	F3S-TGR-CL__-K_ 0.5 m … 40 m F3S-TGR-CL__-K_-___-LD 25 m … 50 m F3S-TGR-CL__-K2C-500 0.5 m … 12 m F3S-TGR-CL__-K3C-800 0.5 m … 8 m F3S-TGR-CL__-K4C-____ 0.5 m … 7 m	
Beam pitch	F3S-TGR-CL__-K2_-500: 2 beams, 500 mm F3S-TGR-CL__-K3_-800: 3 beams, 400 mm F3S-TGR-CL__-K4_-900: 4 beams, 300 mm F3S-TGR-CL__-K4_-1200: 4 beams, 400 mm	
Effective aperture angle acc. EN 61496-2 (2006) for distances >3 m	Within ±5°	Within ±2.5°
Light source	Infrared LED (880 nm), power dissipation <3 mW, Class 1 per EN 60825-1	
Supply Voltage	24 VDC±20%, according EN/IEC60204 able to cover a drop of voltage of at least 20 ms	
OSSD	2 PNP transistor outputs, load current 2x250 mA max	
Test functions	Self test (after power ON and during operation)	
Safety-related functions	All versions: Auto reset/ interlock with manual reset, EDM (external device monitoring) Advance version only: Muting and pre-reset function	
Response time	< 13 ms	
Ambient temperature	Operating: -10°C…+55°C, Storage: -25°C…+70°C (no icing, no condensation)	
Degree of protection	IP 65 (IEC 60529)	
Materials	Case: Painted aluminium, front window: Acrylic Lexan, Cap: ABS, mounting brackets: cold rolled steel	
Size (cross section)	37x48 mm	
Suitable for safety control systems	Cat. 2 (EN954-1), PLc (EN ISO 13849-1)	Cat. 4 (EN954-1), PLe (EN ISO 13849-1)
MTTFd, DC	MTTFd = 450 years, DC = high, MTTR = 8 hours	
PFH, Proof test interval	PFHd = $2{,}5*10^{-9}$, Proof test interval: every 20 years	

Finger- and hand safety protection sensors

Item	F3S-TGR-CL2_-0__	F3S-TGR-CL4_-0__
Sensor type	Type 2	Type 4
Operating range: short setting	F3S-TGR-CL__-014: 0.2 m… 3 m; F3S-TGR-CL__-035: 0.2 m… 7 m	
Operating range: long setting	F3S-TGR-CL__-014: 3 m… 6 m; F3S-TGR-CL__-035: 7 m…14 m	
Beam pitch (center)	14 mm resolution: 7.5 mm 35 mm resolution: 18 mm	
Detection capability	14 mm resolution: 14 mm non-transparent 35 mm resolution: 35 mm non-transparent	
Effective aperture angle acc. EN 61496-2 (2006) for distances < 3 m	Within ±5°	Within ±2.5°
Light source	Infrared LED (880 nm), power dissipation <3 mW, Class 1 per EN 60825-1	
Supply voltage	24 VDC±20%, according EN/IEC60204 able to cover a drop of voltage of at least 20 ms	
OSSD	2 PNP transistor outputs, load current 2x250 mA max	
Test functions	Self test (after power ON and during operation)	
Safety-related functions	All versions: Auto reset/ interlock with manual reset, EDM (external device monitoring) Advance version only: Blanking, muting and pre-reset function	
Response time	ON to OFF: 14 ms…103 ms	
Ambient temperature	Operating: -10°C…+55°C, Storage: -25°C…+70°C (no icing, no condensation)	
Detgree of protection	IP 65 (IEC 60529)	
Materials	Case: Painted aluminium, Front window: Acrylic Lexan, Cap: ABS, mounting brackets: cold rolled steel	
Size (cross section)	37x48 mm	
Suitable for safety control systems	Cat. 2 (EN954-1), PL c (EN ISO 13849-1)	Cat. 4 (EN954-1), PL e (EN ISO 13849-1)
MTTFd, DC	MTTFd = 450 years, DC = high, MTTR = 8 hours	
PFH, Proof test interval	PFHd = $2{,}5*10^{-9}$, Proof test interval: every 20 years	

F3S-TGR-CL and GSB-301-D in manual reset

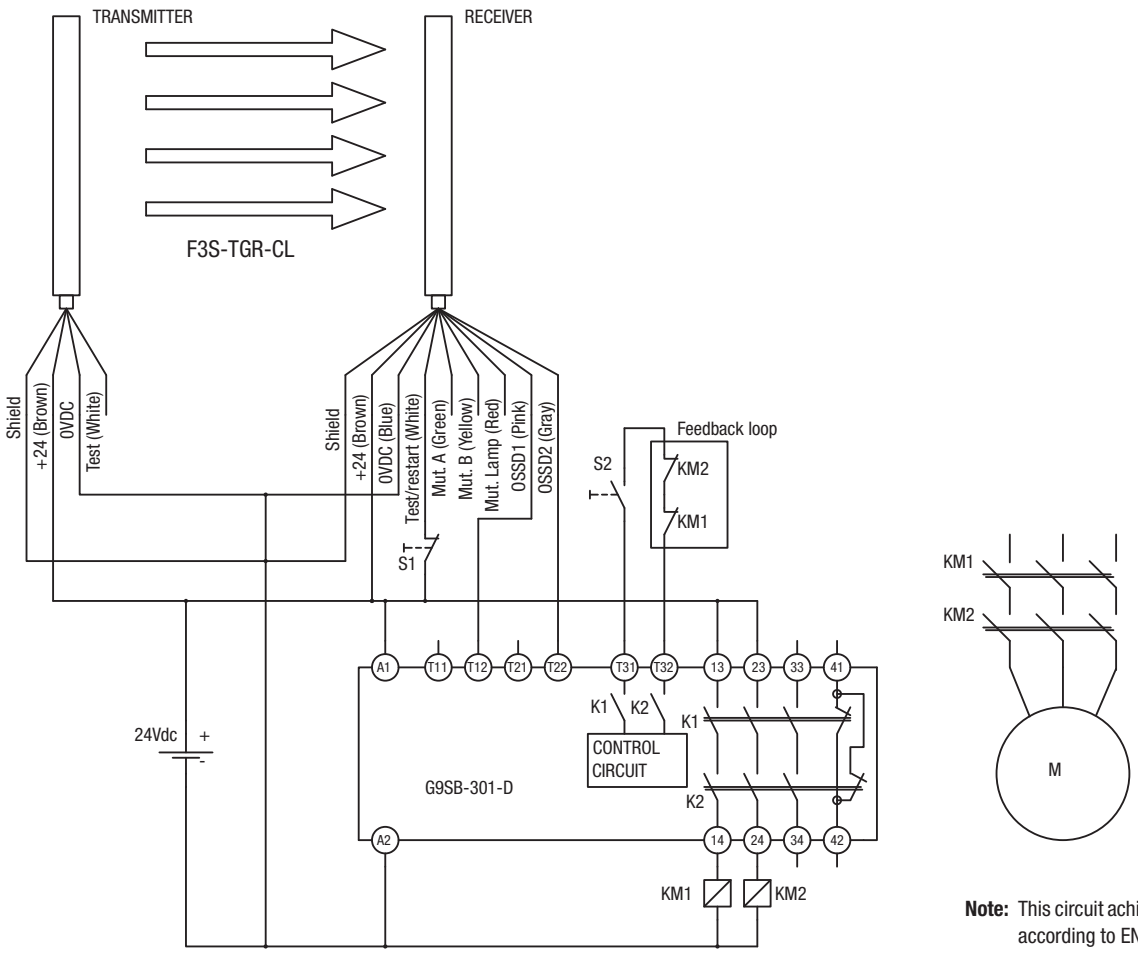

Note: This circuit achieves up to Safety Category 4 according to EN 954-1

Standard cables

Receiver cables (M12-8pin, shielded, flying leads)	
F39-TGR-CVL-B-2-R	Receiver cable, 2 m length
F39-TGR-CVL-B-5-R	Receiver cable, 5 m length
F39-TGR-CVL-B-10-R	Receiver cable, 10 m length
F39-TGR-CVL-B-15-R	Receiver cable, 15 m length
F39-TGR-CVL-B-25-R	Receiver cable, 25 m length

Transmitter cables (M12-4pin, shielded, flying leads)	
F39-TGR-CVL-B-2-E	Transmitter cable, 2 m length
F39-TGR-CVL-B-5-E	Transmitter cable, 5 m length
F39-TGR-CVL-B-10-E	Transmitter cable, 10 m length
F39-TGR-CVL-B-15-E	Transmitter cable, 15 m length
F39-TGR-CVL-B-25-E	Transmitter cable, 25 m length

Mounting bracket F39-TGR-ST-ADJ

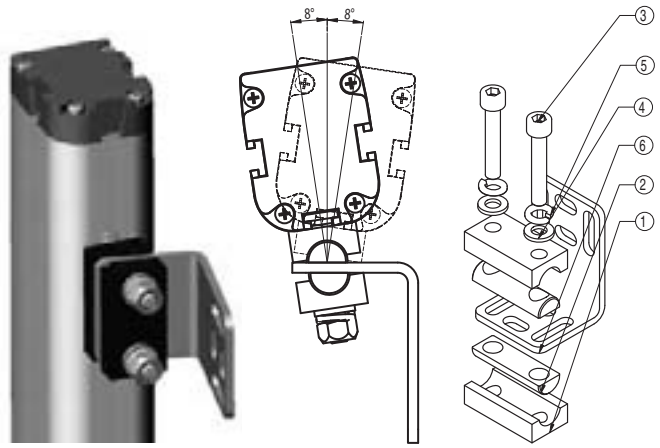

Wiring accessories (connectors and Y-connector cables)

Type	
F39-TGR-CT-B-R	Connector M12, 8-pin, female for wiring
F39-TGR-CT-B-E	Connector M12, 4-pin, female for wiring
F39-TGR-CT-W-R	Connector M12, 8-pin, male for wiring
F39-TGR-CT-W-E	Connector M12, 4-pin, male for wiring
F39-TGR-CVL-D-B-5-R	Cable for sensor system and muting lamp connection

Safety relay units

Family	Type name	Configuration
G9SB	G9SB-200-D	DPST-NO
	G9SB-301-D	3PST-NO
G9SA	G9SA-301	3PST-NO
	G9SA-501	5PST-NO
	G9SA-321-T075	3PST-NO, Time del. 7.5 s
	G9SA-321-T15	3PST-NO, Time del. 15 s
	G9SA-321-T30	3PST-NO, Time del. 30 s
G9SX	G9SX-BC202-RT	2 Safe outputs
	G9SX-BC202-RC	2 Safe outputs
	G9SX-AD322-T15-RT	3 Safe outputs, Time del. 15 s
	G9SX-AD322-T15-RC	3 Safe outputs, Time del. 15 s
	G9SX-AD322-T150-RT	3 Safe outputs, Time del. 150 s
	G9SX-AD322-T150-RC	3 Safe outputs, Time del. 150 s
	G9SX-ADA222-T15-RT	2 Safe outputs, Time del. 15 s
	G9SX-ADA222-T15-RC	2 Safe outputs, Time del. 15 s
	G9SX-ADA222-T150-RT	2 Safe outputs, Time del. 150 s
	G9SX-ADA222-T150-RC	2 Safe outputs, Time del. 150 s
DeviceNet safety	NE1A-SCPU01	16 In, 8 Out, Safety master
	NE1A-SCPU02	40 In, 8 Out, Safety master
Safety controller	NE1A-SCPU01L	16 In, 8 Out
	NE1A-SCPU02L	40 In, 8 Out
Relay interface	F39-TGR-SB-R	Relay interface for semiconductor OSSDs

Dimensions

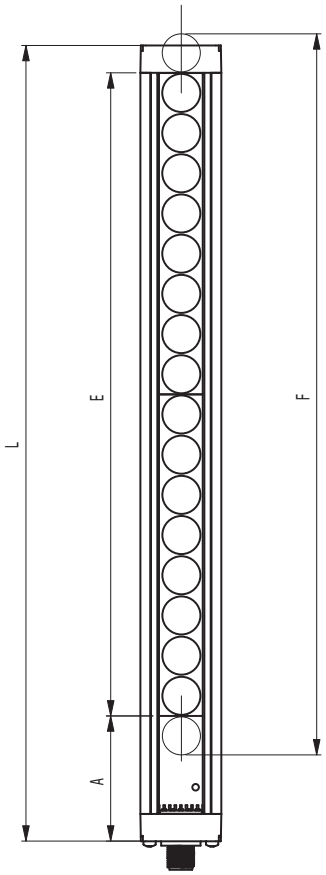

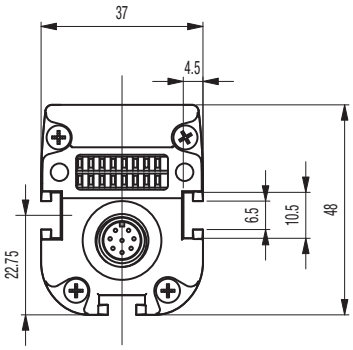

L: Total length of the F3S-TGR-CL system
F: Protective height where an object equal or greater the resolution is detected
E: Detection zone
A: Dead zone without detection capability

Alternate T-slot mounting

F3S-TGR-CL system data with 14 mm resolution

Model number	150	300	450	600	750	900	1050	1200	1350	1500	1650	1800	1950	2100	2250	2400
L [mm]	217	364	511	658	805	952	1099	1246	1393	1540	1687	1834	1981	2128	2275	2422
F [mm]	161	308	455	602	749	896	1043	1190	1337	1484	1631	1778	1925	2072	2219	2366
A [mm]	59	59	59	59	59	59	59	59	59	59	59	59	59	59	59	59
Weight [kg]	0.83 kg	1.39 kg	1.95 kg	2.51 kg	3.07 kg	3.63 kg	4.19 kg	4.75 kg	5.31 kg	5.87 kg	6.43 kg	7 kg	7.55 kg	8.11 kg	8.67 kg	9.24 kg

F3S-TGR-CL system data with 35 mm resolution

Model number	150	300	450	600	750	900	1050	1200	1350	1500	1650	1800	1950	2100	2250	2400
L [mm]	217	364	511	658	805	952	1099	1246	1393	1540	1687	1834	1981	2128	2275	2422
F [mm]	182	329	476	623	770	917	1064	1211	1358	1505	1652	1799	1946	2093	2240	2387
A [mm]	59	59	59	59	59	59	59	59	59	59	59	59	59	59	59	59
Weight [kg]	0.83 kg	1.39 kg	1.95 kg	2.51 kg	3.07 kg	3.63 kg	4.19 kg	4.75 kg	5.31 kg	5.87 kg	6.43 kg	7 kg	7.55 kg	8.11 kg	8.67 kg	9.24 kg

F3S-TGR-CL-K system data

Model number	Weight	Dimensions			
		F [mm]	L [mm]	E [mm]	A [mm]
F3S-TGR-CL_-K2C-500	2.3 kg	518	682	500	59
F3S-TGR-CL_-K3C-800	3.2 kg	818	982	400	59
F3S-TGR-CL_-K4C-900	4.1 kg	918	1082	300	59
F3S-TGR-CL_-K4C-1200	4.9 kg	1218	1382	400	59
F3S-TGR-CL_-K2-500	2.3 kg	518	682	500	59
F3S-TGR-CL_-K3-800	3.2 kg	818	982	400	59
F3S-TGR-CL_-K4-900	4.1 kg	918	1082	300	59
F3S-TGR-CL_-K4-1200	4.9 kg	1218	1382	400	59
F3S-TGR-CL_-K2-500-LD	2.3 kg	518	682	500	59
F3S-TGR-CL_-K3-800-LD	3.2 kg	818	982	400	59
F3S-TGR-CL_-K4-900-LD	4.1 kg	918	1082	300	59
F3S-TGR-CL_-K4-1200-LD	4.9 kg	1218	1382	400	59

Single-beam safety sensor in compact housing

The slender M18-sized E3FS is a type 2 safety single beam with an operating range of up to 10 m. Plastic and metal housing, cable and M12-connector offer flexibility in application together with a control unit such as F3SP-U3P or F3SP-U5P.

- Sensing distance up to 10 m
- LEDs for easy alignment and diagnosis
- Cable and M12 plug categories
- Plastic and metal housing
- Type 2 sensor complying with EN 61496-1

Ordering information

Safety single beam sensors (Type 2)

Case material	Operation distance	Order code	
Plastic	0 to 10 m	Cable type	E3FS-10B4
		Plug type	E3FS-10B4-P1
Nickel brass		Cable type	E3FS-10B4-M
		Plug type	E3FS-10B4-M1-M

Controller for safety single beam sensors

Sensors	Output contacts	Width	Order code
1 to 2 Safety single beam sensors	2 NO 2.5 A	22.5 mm	F3SP-U3P-TGR
1 to 4 Safety single beam sensors		45 mm	F3SP-U5P-TGR

Specifications

Sensors

Sensing method	Through-beam
Controller	F3SP-U3P-TGR, F3SP-U5P-TGR
Supply voltage (Vs)	24 VDC ± 10% (ripple p-p 10% max.)
Effective aperture angle (EAA)	±5° (at 3 m)
Current consumption	Emitter: 50 mA max. Receiver: 25 mA max.
Sensing distance	10 m
Standard sensing object	Opaque object: 11 mm min. in diameter
Response time	2.0 ms (E3FS only)
Control output	PNP transistor output, load current: 100 mA max.
Test input (emitter)	21.5 to 24 VDC: Emitter OFF (source current: 3 mA max.) Open or 0 to 2.5 V: Emitter ON (leakage current: 0.1 mA max.)
Ambient light intensity	Incandescent lamp: 3.000 lx max. (light intensity on the receiver surface) Sunlight: 10,000 lx max. (light intensity on the receiver surface)
Ambient temperature	Operating: -20°C +55°C, storage: -30°C +70°C (with no icing or condensation)
Degree of protection	IP67 (IEC 60529)
Light source	Infrared LED
Protection	Output short-circuit protection, reverse polarity protection

Controllers

Item	F3SP-U3P	F3SP-U5P
Number of sensors	1 to 2 safety single beam sensor	1 to 4 safety single beam sensor
Width	22.5 mm	45 mm
Muting input	2 Inputs	4 Inputs
Safety related function	Override function Muting lamp connection Interlock system (automatic and manual reset)	
Power supply voltage	24 VDC ±10%	
Power consumption	420 mA max.	
Output contacts	2 NO 2.5 A (protected by fuse), 115 VAC max.	2 NO 2.5 A (protected by fuse), 250 VAC max.
Indicators	6 LED for status and diagnostics	
Degree of protection	IP20 (IEC 60529)	
Terminal	16 screw terminals, detachable blocks with '4pin'	32 screw terminals, detachable blocks with '4pin'
Response time	≤ 30 ms	
Ambient temperature	Operation: -10°C +55°C	
Housing material	Plastic; DIN rail mounting	

Safety light curtain controller with integrated muting function

The F3SP-U4P muting controller can handle up to two safety light curtains. It has a 45 mm-wide housing, two safety relay outputs with up to 2.5 A and additional functions such as muting-lamp monitoring and override function.

- Two independent muting functions with override
- Slim housing: 45 mm
- LEDs for status and diagnosis
- Detachable terminals
- Fully certified according to EN 61496-1

Ordering information

Description	Order code
Muting controller for safety light curtain F3S-B, F3SN and F3SH	F3SP-U4P-TGR

Specifications

Item	F3SP-U4P-TGR
Power supply voltage	24 VDC ±10%
Power consumption	420 mA max. (excl. SLC power consumption)
Output contacts	2 NO 2.5 A (protected by fuse)
Indicators	6 LEDs for status and diagnostics.
Degree of protection	IP20 (IEC 60529)
Terminal	32 screw terminals (1.5 mm²), detachable blocks with 4 screws each
Response time	≤ 30 ms
Ambient temperature	Operating: -10 °C + 55 °C
Housing material	Plastic, DIN rail mounting

Wiring example

Control unit F3SP-U4P-TGR in a mixed configuration that allows the use of several Omron safety light curtains and perimetrical guards.

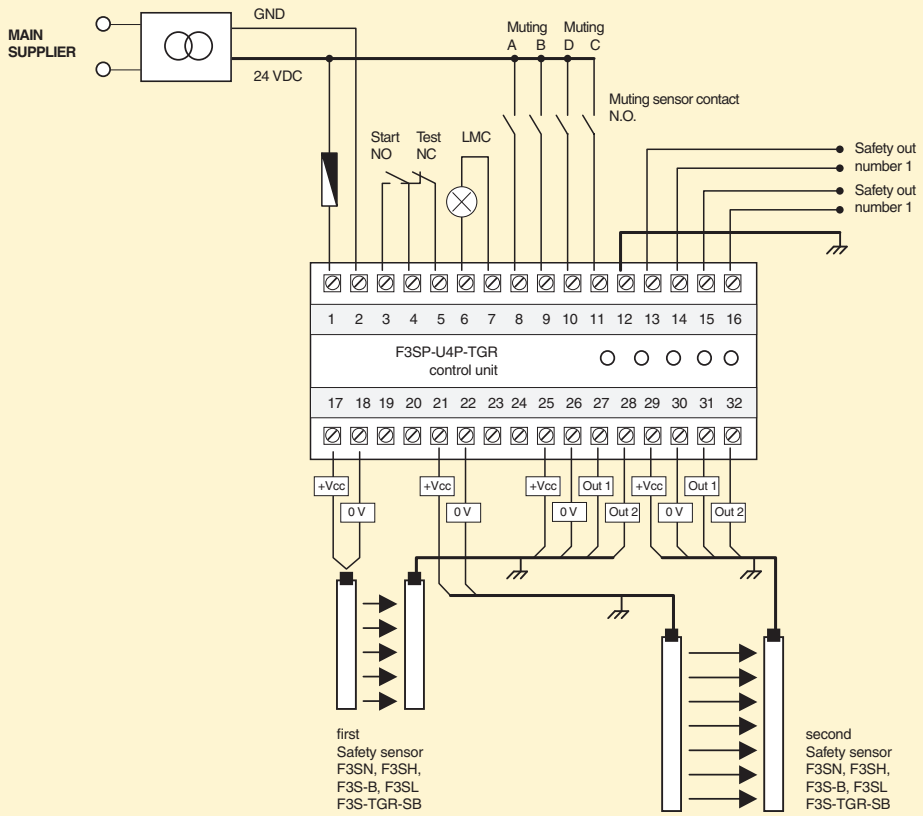

OS32C Safety Laser Scanner

- Type 3 Safety laser scanner complies with IEC61496-1/-3.
- 70 sets of safety zone and warning zone combinations are available, supporting complicated changes in working environments.
- A safety radius up to 3 m and warning zone(s) radius up to 10 m can be set.
- 8 Individual sector indicators and various LED indications allow the user to determine scanner status at a glance.
- Reference boundary monitoring function prevents unauthorized changes in the scanner position.

Ordering information

OS32C (Power cable is sold separately.)

Description	Order code
Back location cable entry	OS32C-BP
Side location cable entry[*1]	OS32C-SP1

[*1] For OS32C-SP1, each connector is located on the left as viewed from the back of the I/O block.

Description	Remarks	Order code
Configuration tool	CD-ROM OS supported: Windows 2000; Windows XP; Windows Vista	included

Note: The OS32C laser scanner may not be sold or imported into or used in the Federal Republic of Germany prior to December 1, 2013.

Mounting brackets

Type	Remarks	Order code
Bottom/side mounting bracket 	Bottom/side mounting bracket x 1, unit mounting screws x 4 sets	OS32C-BKT1
XY axis rotation mounting bracket 	XY axis rotation mounting bracket x 1, unit mounting screws x 6 sets, bracket mounting screws x 1 set (must be used with OS32C-BKT1)	OS32C-BKT2

Note: For a full line-up of accessories and spare parts, please refer to the Z298-E1… datasheet.

Specifications

Sensors

Sensor type		Type 3 Safety laser scanner
Safety category		Category 3, performance level d (ISO13849-1: 2006)
Detection capability		Non-transparent with a diameter of 70 mm (1.8% reflectivity or greater)
Monitoring zone		Monitoring zone set count: (Safety zone + 2 warning zones) x 70 sets
Operating range		Safety zone radius up to 3 m, warning zone radius up to 10 m.
Detection angle		270°
Response time		Response time from ON to OFF: From 80 ms (2 scans) to 680 ms (up to 17 scans) Response time from OFF to ON: Response time from ON to OFF + 100 ms to 60 s (configurable)
Line voltage		24 VDC +25%/-30% (ripple p-p 2.5 V max.)[*1]
Power consumption		Normal operation: 5 W max., 4 W typical (without output load)[*2] Standby mode: 3.75 W (without output load)
Safety output (OSSD)		PNP transistor x 2, load current of 250mA max., residual voltage of 2 V max., load capacity of 2.2 µf max., leak current of 1 mA max.[*2,*3,*4]
Auxiliary output (Non-Safety)		NPN/PNP transistor x 1, load current of 100 mA max., residual voltage of 2 V max., leak current of 1 mA max.[*3,*4,*5]
Warning output (Non-Safety)		NPN/PNP transistor x 1, load current of 100 mA max., residual voltage of 2 V max., leak current of 1 mA max.[*3,*4,*5]
Output operation mode		Auto start, start interlock, start/restart interlock
Input	**External Device Monitoring (EDM)**	ON: 0 V short (input current of 50 mA), OFF: Open
	Start	ON: 0 V short (input current of 20 mA), OFF: Open
	Zone select	ON: 24 V short (input current of 5 mA), OFF: Open
	Stand-by	ON: 24 V short (input current of 5 mA), OFF: Open
Connection type		Power cable: 18-pin mini-connector (pigtail) Communication cable: M12, 4-pin connector
Connection with PC		Communication: Ethernet
Indicators		RUN indicator: Green, STOP indicator: Red, Interlock indicator: Yellow, Warning output indicator: Orange, Status/diagnostic display: 2 x 7-segment LEDs, Intrusion indicators: Red LED x 8
Enclosure rating		IP65 (IEC60529)
Dimensions (WxHxD)		133.0 x 104.5 x 142.7 mm (except cable)
Weight (Main Unit only)		1.3 kg
Approvals		EN61496-1 (Type 3 ESPE), EN61496-3 (Type 3 AOPDDR), EN61508 (SIL2), ISO13849-1 (Category 3, Performance Level d), UL508, UL1998, CAN/CSA-C22.2 No. 14, CAN/CSA-C22.2 No. 0.8

[*1] For power source specification, refer to “Safety Precautions” on page 16.
[*2] Rated current of OS32C is 1.025 A max. (OS32C 210 mA + OSSD A load + OSSD B load + auxiliary output load + warning output load + functional Inputs). Where functional inputs are: EDM input ... 50 mA Start input ... 20 mA Standby input ... 5 mA Zone X input ... 5 mA x 8 (eight zone set select inputs)
[*3] Output voltage is input voltage - 2.0 VDC.
[*4] Total consumption current of 2 OSSDs, auxiliary output, and warning output must not exceed 700 mA.
[*5] Output polarity (NPN/PNP) is configurable via the configuration tool.

Connection

Basic connection with single OS32C unit
Category 3, performance level d (ISO13849-1)

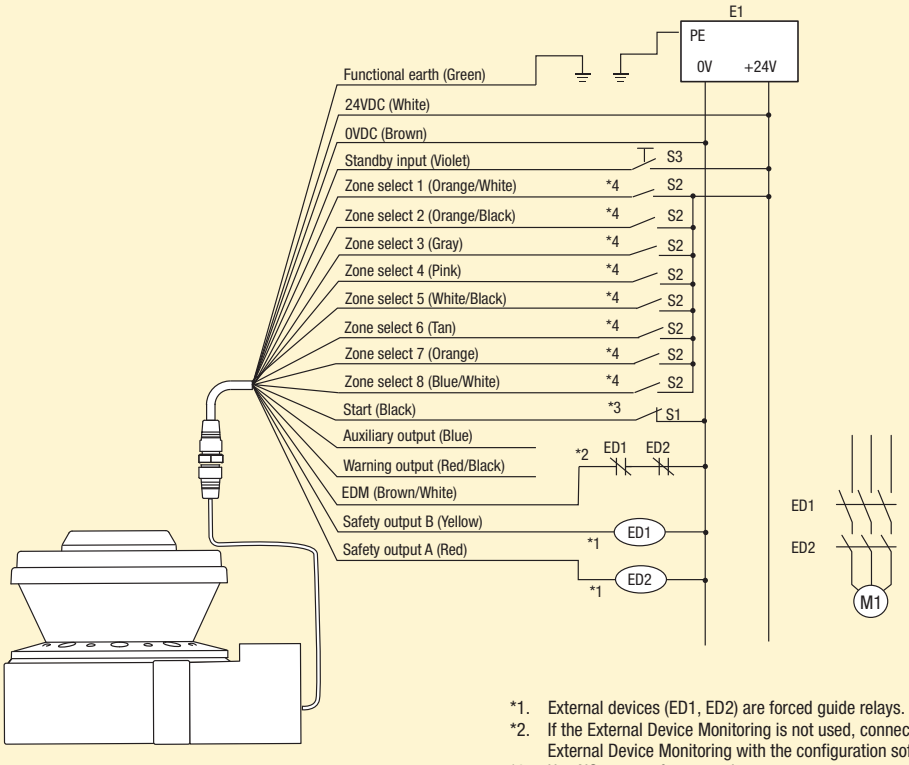

S1 : Start input
S2 : Zone select switch
S3 : Standby switch
ED1, ED2: Forced guided relay
M1 : 3-Phase motor
E1 : 24 VDC Power

OS32C Configuration
- External Device Monitoring enabled
- Start/restart interlock

*1. External devices (ED1, ED2) are forced guide relays. (G7Z, G7SA, G7S, etc)
*2. If the External Device Monitoring is not used, connect brown/white wires to 0 V, and then turn OFF the External Device Monitoring with the configuration software.
*3. Use NC-contact for a start input.
*4. For zone select switch setting, refer to OS32C Series user's manual.
Note: This wiring example is for category 3.

Dimensions

OS32C with back location cable entry - OS32C-BP

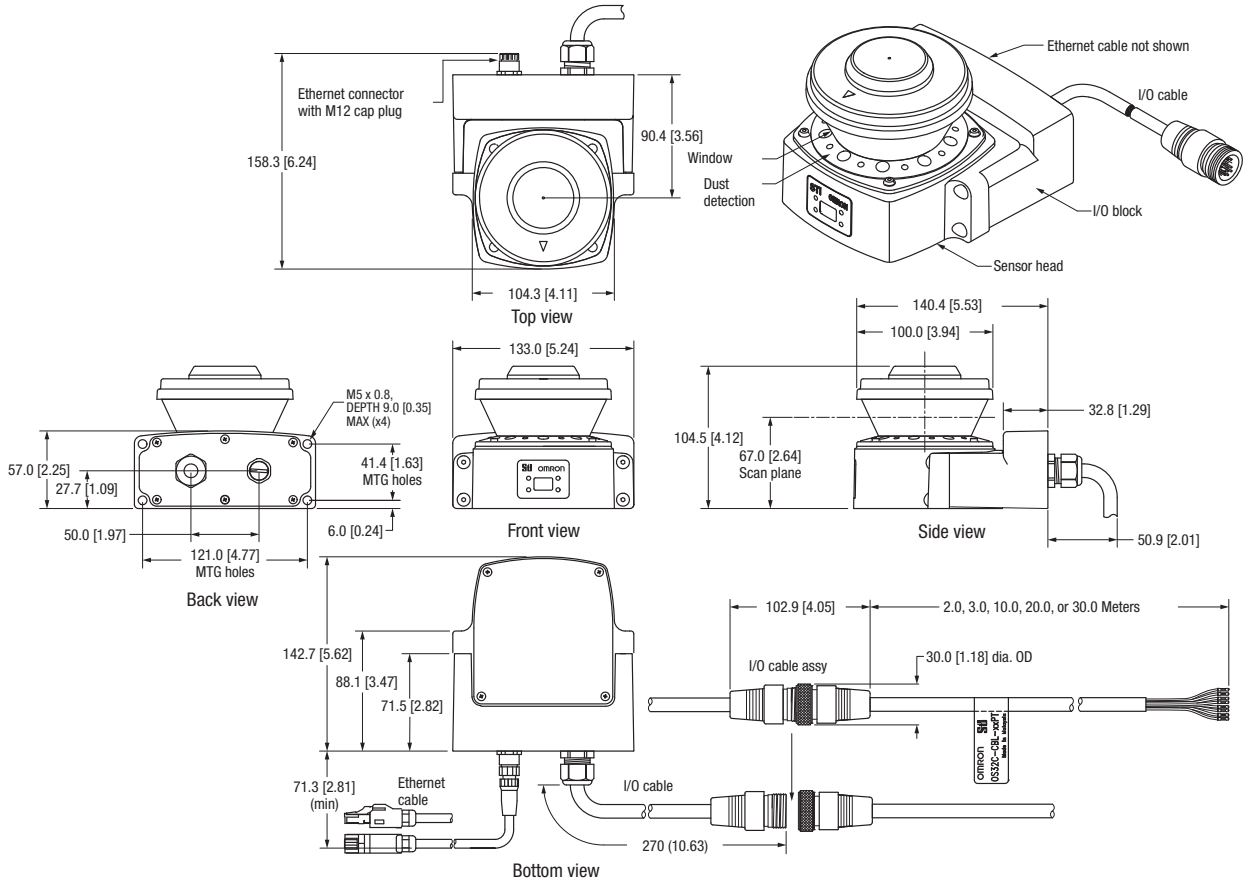

OS32C with side LIcation cable entry - OS32C-SP1

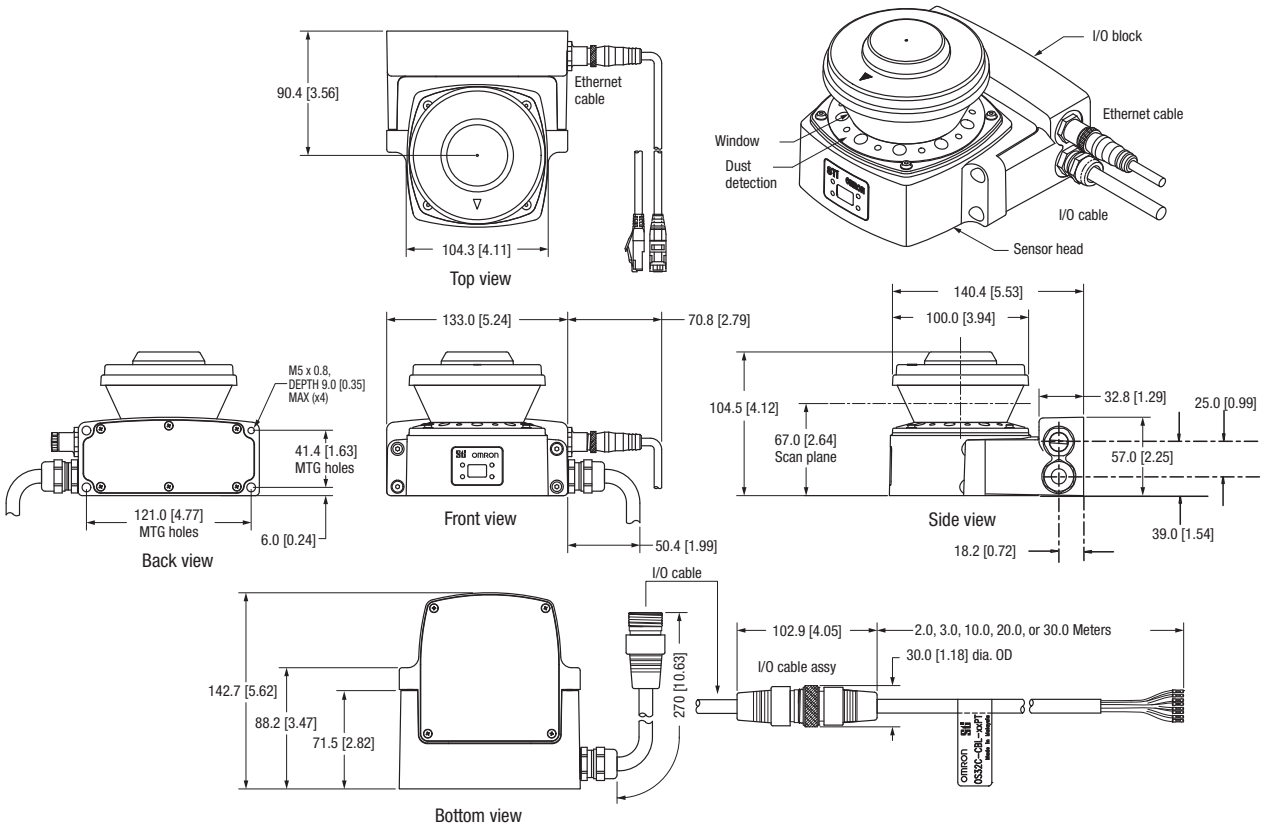

SAFE CONTROL SYSTEMS

Configurable, flexible and simple

Omron safety controllers offer transparent standalone operation and scalability in safety networking applications for all sizes of machine safety control systems. The G9SP safety controller is simple to configure and setup and overcomes limitations of hard-wired solutions by adding flexibility of a software-based solution. Total cost of ownership is reduced by having user-defined function blocks and an integrated simulation tool for debugging of the application program.

Number of In- and Outputs

DeviceNet Safety

EtherNet/IP

Per Safety Network
Max. 1024 safety inputs
Max. 512 safety outputs

NE1A-SCPU0_	DST1-ID12 DST1-MD16 DST1-MRD08
	
page 105	page 106

Standalone operation

Programmable with Ethernet and Serial Interface

Per programmable controller
Max. 20 safety inputs
Max. 16 safety outputs

NEOA	NE1A-SCPU0_L	G9SP
		
page 102	page 102	page 100

Standalone operation

Hardware-defined

1 safety input,
1 safety output

Operation Mode / Bus System | Number of In- and Outputs | Products

SAFE SENSING

Control and signalling devices	Safety Limit Switches	Safety Door Switches	Safety Sensors
			
A22E	D4N-_	F3S-TGR-N_C	F3S-TGR-CL
see page 37	see page 56	see page 68	see page 79

SAFE ACTUATING

Safe Inverter	Relays and Contractors with Safety function
	
MX2	G7Z
see page 116	see page 112

Emergency stop up to cat. 4	**G9SB**  Slim size 17,5m, 22.5 mm	**G9SA**  Expandable more contacts / time delay	**G9SX**  Flexible safety unit solid state outputs
Door monitoring up to cat. 4	**G9SB**  Slim size 17,5m, 22.5 mm	**G9SA**  Expandable more contacts / time delay	**G9SX**  Flexible safety unit solid state outputs
Expansion of contacts	**G9SB**  Expansion unit	**G7SA / G7S**  Safety relay	**G9SX**  Flexible safety unit
Dedicated Safety Function	**G9SA-TH301**  Two-hand control unit type IIIC	**G9SX-NS**  Monitoring of D40A non-contact switches	**G9SX-GS**  Monitoring of Enabling devices
Speed monitoring up to cat. 4	**G9SX-LM**  Limited speed monitoring	**G9SX-SM**  Standstill monitoring	

Slim-size safety unit

G9SB is a family of slender safety relay units, providing two safety contacts in a 17.5 mm- and three safety contacts in a 22.5mm-wide housing.

- 17.5 mm- and 22.5 mm-wide housing
- 1- and 2-input channel units
- Manual and automatic reset units
- Certification up to category 4 according to EN954-1 depending on the application

Ordering information

Main contacts	Auxiliary contact	Number of input channels	Reset mode	Input type	Rated voltage	Category (EN954-1)	Size	Order code
DPST-NO 2 safety contacts	None	2 channels	Auto-reset	Inverse	24 VAC/VDC	4	17.5 mm	G9SB-2002-A
		1 channel or 2 channels		+ common				G9SB-200-B
		2 channels	Manual-reset	Inverse				G9SB-2002-C
		1 channel or 2 channels		+ common				G9SB-200-D
3PST-NO 3 safety contacts	SPST-NC	None (direct breaking)	Auto-reset	–	24 VDC	3	17.5 mm	G9SB-3010
		2 channels		Inverse	24 VAC/VDC	4	22.5 mm	G9SB-3012-A
		1 channel or 2 channels		+ common				G9SB-301-B
		2 channels	Manual-reset	Inverse				G9SB-3012-C
		1 channel or 2 channels		+ common				G9SB-301-D

Specifications

Power input

Item	G9SB-200_-_	G9SB-3010	G9SB-301_-_
Power supply voltage	24 VAC/VDC: 24 VAC, 50/60 Hz, or 24VDC 24 VDC: 24 VDC		
Operating voltage range	85 to 110% of rated power supply voltage		
Power consumption	1.4 VA/1.4 W max.	1.7 W max.	1.7 VA/1.7 W max.

Inputs

Item	G9SB-200_-_	G9SB-3010	G9SB-301_-_
Input current	25 mA max.	60 mA max. (See note.)	30 mA max.

Note: Indicates the current between terminals A1 and A2.

Contacts

Item	G9SB-200_-_	G9SB-3010	G9SB-301_-_
	Resistive load (cosϕ= 1)		
Rated load	250 VAC, 5 A		
Rated carry current	5 A		

Characteristics

Item		G9SB-200_-_	G9SB-3010	G9SB-301_-_
Response time *1		10 ms max.		
Durability	Mechanical	5,000,000 operations min. (at approx. 7,200 operations/hr)		
	Electrical	100,000 operations min. (at approx. 1,800 operations/hr)		
Minimum permissable load (reference value)		5 VDC, 1 mA		
Ambient operating temperature		-25°C +55°C (with no icing or condensation)		

*1 The response time is the time it takes for the main contact to open after the input is turned OFF.

Expandable safety relay unit

G9SA-family offers a complete line-up of compact and expandable safety relay units. Modules with safe OFF-delay timing are available as well as a two-hand controller. Simple multiplication of safety contacts is possible by using the connection on the front.

- 45 mm-wide housing, expansion units are 17.5 mm wide
- Safe OFF-delay timer
- Simple expansion connection
- Certification up to category 4 according to EN954-1 depending on the application

Ordering information

Emergency-stop units

Main contacts	Auxiliary contact	Number of input channels	Rated voltage	Category	Order code
3PST-NO	SPST-NC	1 channel or 2 channels possible	24 VAC/VDC	4	G9SA-301
			100 to 240 VAC		
5PST-NO	SPST-NC	1 channel or 2 channels possible	24 VAC/VDC		G9SA-501
			100 to 240 VAC		

Emergency-stop OFF-delay units

Main contacts	OFF-delay contacts	Auxiliary contact	Number of input channels	OFF-delay time	Rated voltage	Category	Order code
3PST-NO	DPST-NO	SPST-NC	1 channel or 2 channels possible	7.5 s	24 VAC/VDC	Main contacts: 4 OFF-delay contacts: 3	G9SA-321-T075
					100 to 240 VAC		
				15 s	24 VAC/VDC		G9SA-321-T15
					100 to 240 VAC		
				30 s	24 VAC/VDC		G9SA-321-T30
					100 to 240 VAC		

Two-hand controller

Main contacts	Auxiliary contact	Number of input channels	Rated voltage	Category	Order code
3PST-NO	SPST-NC	2 channels	24 VAC/VDC	4 (IIIc, EN574)	G9SA-TH301
			100 to 240 VAC		

Expansion unit

The expansion unit connects to a G9SA-301, G9SA-501, G9SA-321, or G9SA-TH301.

Main contacts	Auxiliary contact	Category	Order code
3PST-NO	SPST-NC	4	G9SA-EX301

Expansion units with OFF-delay outputs

The expansion unit connects to a G9SA-301, G9SA-501, G9SA-321, or G9SA-TH301.

Main contact form	Auxiliary contact	OFF-delay time	Category	Order code
3PST-NO	SPST-NC	7.5 s	3	G9SA-EX031-T075
		15 s		G9SA-EX031-T15
		30 s		G9SA-EX031-T30

Specifications

Power input

Item	G9SA-301/TH301 / G9SA-501 / G9SA-321-T_
Power supply voltage	24 VAC/VDC: 24 VAC, 50/60 Hz, or 24 VDC 100 to 240 VAC:100 to 240 VAC, 50/60 Hz
Operating voltage range	85 to 110% of rated power supply voltage

Inputs

Item	G9SA-301/321-T_/TH301	G9SA-501
Input current	40 mA max.	60 mA max.

Contacts

Item	G9SA-301/501/321-T_/TH301/EX301/EX031-T_
	Resistive load (cosϕ= 1)
Rated load	250 VAC, 5 A
Rated carry current	5 A

Characteristics

Item		G9SA-301/TH301 / G9SA-501/321-T_ / G9SA-EX301/EX031-T_
Operating time		30 ms max. (not including bounce time)
Response time *1		10 ms max. (not including bounce time)
Durability	Mechanical	5,000,000 operations min. (at approx. 7,200 operations/hr)
	Electrical	100,000 operations min. (at approx. 1,800 operations/hr)
Minimum permissible load (reference value)		5 VDC, 1 mA
Ambient temperature		Operating: -25 to 55°C (with no icing or condensation) Storage: -25 to 85°C (with no icing or condensation)

*1 The response time is the time it takes for the main contact to open after the input is turned OFF.

Compact non-contact door switch/ flexible safety unit

Electronic detection mechanism for better stability in non-contact door switch operation

- Stable operation reduces controller errors caused by unstable doors.
- Connect up to 30 non-contact door switches with LED indicators to one controller.
- Reversible switch provides flexibility in installation.
- Two-color LED indicator enables easier maintenance by identification of door status and cable disconnections.
- Safety category 3 (EN 954-1).

Ordering information

Non-contact door switches (switch/actuator)

Classification	Auxiliary outputs	Cable length	Order code
Standard models	Semiconductor outputs *1	2 m	D40A-1C2
		5 m	D40A-1C5

*1 PNP open-collector semiconductor output.
Note: Must be used in combination with a G9SX-NS_ non-contactdoor switch controller.

On-contact door switch controllers (Controllers for D40A)

Safety outputs *1		Auxiliary outputs *2	Logical AND connection input	Logical AND connection output	Max. OFF delay time *3	Rated voltage	Terminal block type	Order code
Instantaneous	OFF-delayed *4							
2 (Semi-conductors)	0	2 (Semi-conductors)	1	1	–	24 VDC	Screw terminals	G9SX-NS202-RT
							Spring-cage terminals	G9SX-NS202-RC
	2 (Semi-conductors)				3.0 s		Screw terminals	G9SX-NSA222-T03-RT
							Spring-cage terminals	G9SX-NSA222-T03-RC

*1 P channel MOS FET transistor output
*2 PNP transistor output
*3 The OFF-delay time can be set in 16 steps as follows:
0/0.2/0.3/0.4/0.5/0.6/0.7/0.8/0.9/1.0/1.2/1.4/1.8/2.0/2.5/3.0 s
*4 The OFF-delayed output becomes an instantaneous output by setting the OFF-delay time to 0 s.

Specifications

Ratings/characteristics of non-contact door switches

Item	Model	D40A-1C_
Operating characteristics *1	Operating distance OFF→ON	5 mm min.
	Operating distance ON→OFF	15 mm max.
	Differential travel (max.)	20% of operating distance
Ambient operating temperature		–10 to 55°C (no icing or condensation)
Vibration resistance		10 to 55 to 10 Hz (single amplitude: 0.75 mm, double amplitude: 1.5 mm)
Shock resistance		300 m/s^2 min.
Degree of protection		IP67
Material		PBT resin
Mounting method		M4 screws
Power consumption		0.6 W max.
Auxiliary outputs *2		24 VDC, 10 mA (PNP open-collector outputs)
LED indicators		Actuator not detected (red); actuator detected (yellow)
Connection cables		2 m, 5 m
Number of connectable switches		30 max. (wiring length: 100 m max.)

*1 This is the distance where the switch operates from OFF to ON when approaching and the distance where the switch operates from ON to OFF when separating when the switch and actuator target marks are on the same axis, and the sensing surfaces coincide.
*2 Turns ON when the actuator is approaching.

Ratings of non-contact door switch controllers

Power input

Item	G9SX-NS202-_	G9SX-NSA222-T03-_	G9SX-EX-_
Rated supply voltage	24 VDC		

Inputs

Item	G9SX-NS202-_/G9SX-NSA222-T03-_
Safety input *1	Operating voltage: 20.4 VDC to 26.4 VDC, internal impedance: approx. 2.8 kΩ
Feedback/reset input	

*1 Only applies to the G9SX-NSA222-T03-_. Refers to input other than that from the non-contact door switch.

Outputs

Item	G9SX-NS202-_/G9SX-NSA222-T03-_
Instantaneous safety output OFF-delayed safety output	P channel MOS FET transistor output Load current: 0.8 A DC max.
Auxiliary output	PNP transistor output Load current: 100 mA max.

Non-contact door switch and non-contact door switch controller wiring

Example: Wiring a single switch

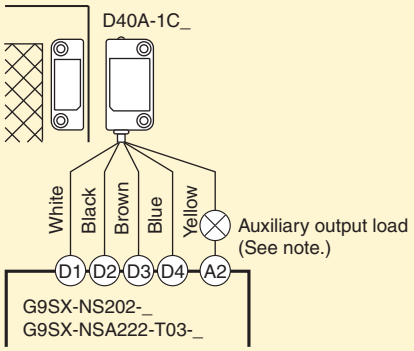

Note: The auxiliary output load current must be 10 mA max.

Example: Wiring multiple switches

Connect up to 30 Non-contact door switches

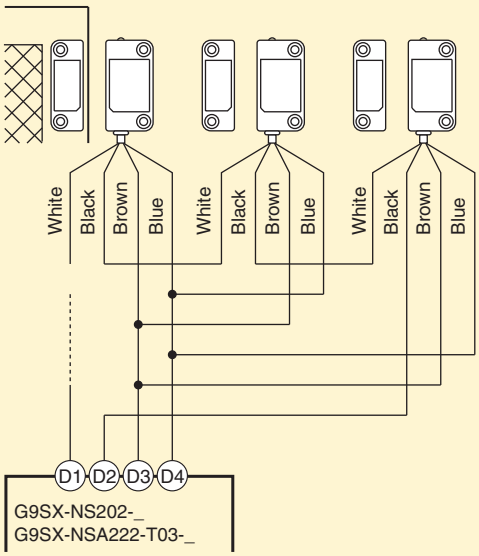

Safety guard switchting unit

The safety controller to support maintenance mode of machinery in the safe way.

- Two operation modes to support:
  - Auto switching for applications where machine and worker co-operate.
  - Manual switching for applications with limitation in operation like maintenance.
- Clear and transparent segmentation of safety functions by use of unique "AND"connection
- Clear LED diagnosis of all in- and output signals for easy maintenance
- Category 4 according to EN954-1 and SIL 3 according to EN 61508.

Ordering information

Enabling grip switches

Contact form			Order code
Enabling switch	Monitor switch	Pushbutton switch	
Two contacts	1NC (grip output)	None	A4EG-C000041
Two contacts	None	Emergency stop switch (2NC)	A4EG-BE2R041
Two contacts	None	Momentary operation switch (2NO)	A4EG-BM2B041

Safety guard switching units

Safety outputs *1		Auxiliary outputs *2	Logical AND connection input	Logical AND connection output	Max. OFF delay time *3	Rated voltage	Terminal block type	Order code
Instantaneous	OFF-delayed *4							
2 (Semi-conductors)	2 (Semi-conductors)	6 (Semi-conductors)	1	1	15 s	24 VDC	Screw terminals	G9SX-GS226-T15-RT
							Spring-cage terminals	G9SX-GS226-T15-RC

*1 P channel MOS FET transistor output
*2 PNP transistor output
*3 The OFF-delay time can be set in 16 steps as follows:
T15: 0, 0.2, 0.3, 0.4, 0.5, 0.6, 0.7, 1, 1.5, 2, 3, 4, 5, 7, 10 or 15 s
*4 The OFF-delayed output becomes an instantaneous output by setting the OFF-delay time to 0 s.

Specifications

Ratings of non-contact door switch controllers

Power input

Item	G9SX-GS226-T15-_	G9SX-EX-_
Rated supply voltage	24 VDC	

Inputs

Item	G9SX-GS226-T15-_
Safety input	Operating voltage: 20.4 VDC to 26.4 VDC, internal impedance: approx. 2.8 kΩ
Feedback/reset input	
Mode selector input	

Outputs

Item	G9SX-G9SX-GS226-T15-_
Instantaneous safety output OFF-delayed safety output	P channel MOS FET transistor output Load current: 0.8 A DC max.
Auxiliary output	PNP transistor output Load current: 100 mA max.
External indicator outputs	P channel MOS FET transistor outputs Connectable indicators • Incandescent lamp: 24 VDC, 3 W to 7 W • LED lamp: 10 to 300 mA DC

Application example

Automatic switching mode

Worker is loading and unloading the machine manually. When loading is finished, robot cycle is started manually by the worker. When robots return to their home position, loading cycle is selected automatically.

Loading condition: Safety sensor B is not active, safety sensor A is active because the robots are not allowed to move to the loading area while the worker loads the machine. So the worker is safe because safety sensor A is active.

Robot work condition: Safety sensor B is active, safety sensor A is not active because the worker is not allowed to move to the loading area when the robots work. So the worker is safe because safety sensor B stops the machine if he moves to the loading area.

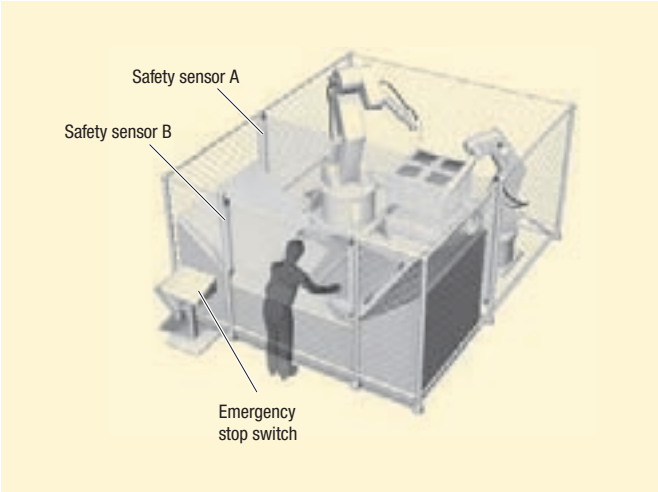

Manual switching mode

Worker has to do maintenance in this machine. While maintenance, it is necessary to move the machine in a limited way. The worker has to select automatic mode or manual mode manually by using the mode selector switch.

Operation steps:

1) Select maintenance mode by using the mode selector
2) Open the door to do the maintenance while the machine still is able to operate in a limited way (monitoring of limited movement by using the safety limit switch).
3) Close the cover after finishing maintenance
4) Select automatic mode by using the mode selector

E-Stop conditions:

a) open the door while not in maintenance mode
b) the machine actuates the limit switch (breaks the limit).
c) the Enabling grip switch A4EG is actuated to stop the machine in emergency condition.

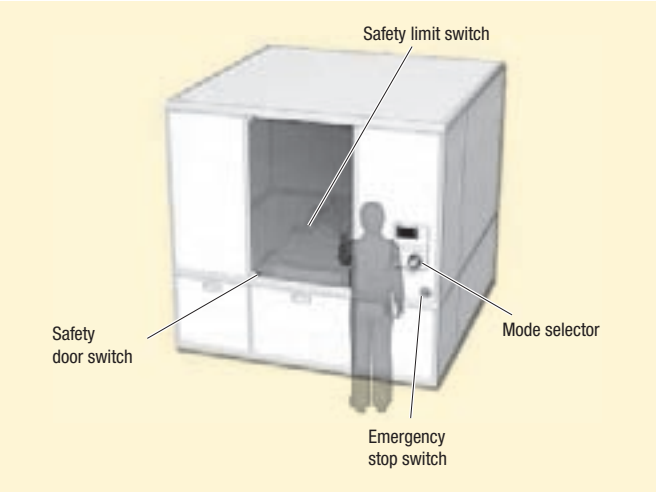

Flexible safety unit

G9SX-family modules can be connected by a logical “AND” function to implement partial/global stopping of a machine. Solid-state outputs, detailed LED diagnosis and clever feedback signals help to keep maintenance easy. The line-up is completed by expansion units with safe timing functions.

- Clear and transparent segmentation of safety functions by use of unique "AND" connection
- Solid-state outputs for long life and relay outputs in extension box available
- Detailed LED indications enable easy diagnosis
- Clever feedback signals for easy maintenance
- Category-4 according to EN954-1 and SIL 3 according to EN 61508

Ordering information

Advanced unit

Safety outputs		Auxiliary outputs	No. of input channels	Max. OFF-delay time *1	Rated voltage	Terminal block type	Order code
Instantaneous	OFF-delayed						
3 P channel MOS-FET transistor output	2 P channel MOS-FET transistor output	2 PNP transistor outputs	1 or 2 channels	0 to 15 sec in 16 steps	24 VDC	Screw terminals	G9SX-AD322-T15-RT
						Cage clamp terminals	G9SX-AD322-T15-RC
2 P channel MOS-FET transistor output	2 P channel MOS-FET transistor output	2 PNP transistor outputs	1 or 2 channels	0 to 150 sec in 16 steps	24 VDC	Screw terminals	G9SX-AD-322-T150-RT
						Cage clamp terminals	G9SX-AD-322-T150-RC
				0 to 15 sec in 16 steps	24 VDC	Screw terminals	G9SX-ADA-222-T15-RT
						Cage clamp terminals	G9SX-ADA-222-T15-RC
				0 to 150 sec in 16 steps	24 VDC	Screw terminals	G9SX-ADA-222-T150-RT
						Cage clamp terminals	G9SX-ADA-222-T150-RC

*1 The OFF-delay time can be set in 16 steps as follows: T15: 0/0.2/0.3/0.4/0.5/0.6/0.7/1/1.5/2/3/4/5/7/10/15 s, T150: 0/10/20/30/40/50/60/70/80/90/100/110/120/130/140/150 s.

Basic unit

Safety outputs		Auxiliary outputs	No. of input channels	Rated voltage	Terminal block type	Order code
Instantaneous	OFF-delayed					
2 P channel MOS FET transistor output	–	2 PNP transistor output	1 or 2 channels	24 VDC	Screw terminals	G9SX-BC202-RT
					Cage clamp terminals	G9SX-BC202-RC

Expansion unit

Safety outputs		Auxiliary outputs	OFF-delay time	Rated voltage	Terminal block type	Order code
Instantaneous	OFF-delayed					
4 PST-NO (contact)	–	2 (solid state) PNP transistor outputs	–	24 VDC	Screw terminals	G9SX-EX401-RT
					Cage clamp terminals	G9SX-EX401-RC
–	4 PST-NO (contact)		Synchronized with G9S-X-AD - unit		Screw terminals	G9SX-EX041-T-RT
					Cage clamp terminals	G9SX-EX041-T-RC

Specifications

Power input

Item	G9SX-AD_	G9SX-BC202-_	G9SX-EX-_
Rated supply voltage	20.4 to 26.4 VDC (24 VDC -15% +10%)		

Inputs

Item	G9SX-AD_	G9SX-BC202-_
Safety input	Operating voltage: 20.4 VDC to 26.4 VDC, internal impedance: Approx. 2.8 kΩ	
Feedback/reset input		

Outputs

Item	G9SX-AD_	G9SX-BC202-_
Instantaneous safety output OFF-delayed safety output	P channel MOS FET transistor output Load current: Using 2 outputs or less: 1 A DC max. Using 3 outputs or more: 0.8 A DC max.	P channel MOS FET transistor output Load current: Using 1 output: 1 A DC max. Using 2 outputs: 0.8 A DC max.
Auxiliary output	PNP transistor output Load current: 100 mA max.	

Expansion unit

Item	G9SX-EX-_
Rated load	250 VAC, 3A/30 VDC, 3A (resistive load)
Rated carry current	3 A
Maximum switching voltage	250 VAC, 125 VDC

Characteristics

Item		G9SX-AD_	G9SX-BC202-_	G9SX-EX-_
Operating time (OFF to ON state)		50 ms max. (Safety input: ON) 100 ms max. (Logical AND connection input: ON)	50 ms max. (Safety input: ON)	30 ms max.
Response time (ON to OFF state)		15 ms max.		10 ms max.
Durability	Electrical	–		100,000 cycles min.
	Mechanical	–		5,000,000 cycles min.
Ambient temperature		-10°C +55°C (with no icing or condensation)		

Standstill monitoring unit

Safe standstill monitoring unit based on Back-EMF operation for two- and three-phase systems.

- Ready to use – covering all standard applications without additional setup
- Easy integration in star- and delta wiring
- Clear LED diagnosis of all in- and output signals for easy maintenance
- Applicable up to Safety Category 4 according to EN954-1

Ordering information

Safety standstill monitoring unit

Safety outputs *1 Instantaneous	Auxiliary outputs *1	Power input Rated supply voltage	Terminal block type	Order code
3 (Semi-conductors)	2 (Semi-conductors)	24 VDC	Screw terminals	G9SX-SM032-RT
			Spring-cage terminals	G9SX-SM032-RC

*1 PNP transistor output

Specifications

Ratings of non-contact door switch controllers

Power input

Item	G9SX-SM032-_
Rated supply voltage	24 VDC

Inputs

Item	G9SX-SM032-__
Input voltage	Standstill detection input (Z1-Z2/Z3-Z4) AC 415 Vrms + 10% max.
Maximum power supply frequency for AC induction motor	60 Hz max.
Internal impedance	Standstill detection input: approx, 660 kΩ EDM input: approx. 2.8 kΩ

Outputs

Item	G9SX-SM032-_
Safety standstill detection output	Sourcing output (PNP) Load current: 300 mA DC max.
Auxiliary output	Sourcing output (PNP) Load current: 100 mA DC max.

Application example

3-phase motor

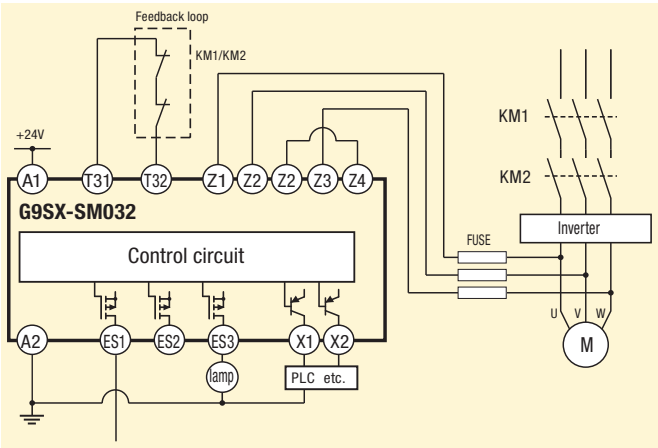

Standstill detected

3-phase motor with star-delta wiring

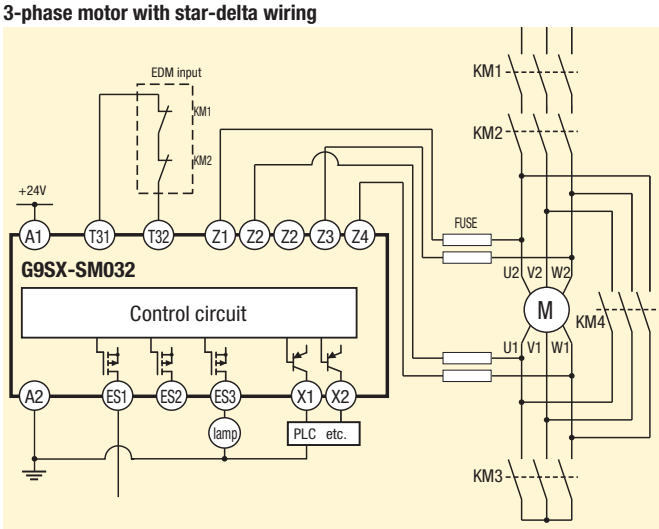

Standstill detected

Limited speed monitoring unit

Safe limited speed monitoring unit for complete support of maintenance mode in machinery.

- Preset of limited speed frequency by using integrated preset switches
- Easy integration in G9SX-Systems by using unique logical "AND" connection
- Clear LED diagnosis of all in- and output signals for easy maintenance
- Applicable up to safety category 3 according to EN954-1 using Omron proximity sensors

Ordering information

Proximity sensors

Classification			Order code
Proximity sensor	Shielded	M8	E2E-X1R5F1
		M12	E2E-X2F1
		M18	E2E-X5F1
	Unshielded	M8	E2E-X2MF1
		M12	E2E-X5MF1
		M18	E2E-X10MF1

Safety standstill monitoring unit

Safety outputs *1 Instantaneous	Auxiliary outputs *2	Logical AND connection input	Rated voltage	Sensor power supply terminals	Terminal block type	Order code
4 (Semi-conductors)	4 (Semi-conductors)	1	24 VDC	2	Screw terminals	G9SX-LM224-F10-RT
					Spring-cage terminals	G9SX-LM224-F10-RC

*1 P channel MOS FET output
*2 PNP transistor output

Specifications

Ratings of non-contact door switch controllers

Power input

Item	G9SX-LM224-F10-_
Rated supply voltage	24 VDC

Inputs

Item	G9SX-LM224-F10-_
Safety input	Operating voltage: 20.4 VDC to 26.4 VDC Internal impedance: approx. 2.8 kΩ
Feedback/reset input	
Mode selector input	
Rotation detection input	Operating voltage 20.4 VDC to 26.4 VDC Internal impedance: approx. 2.8 kΩ Input frequency: 1 kHz max.

Outputs

Item	G9SX-LM224-F10-_
Safety solid state output	P channel MOS FET transistor output Load current: 0.8 A DC max.
Safety speed detection output	P channel MOS FET transistor output Load current: 0.3 A DC max.
External indicator output	PNP transistor output Load current: 100 mA max.

Application example

Safe limited speed

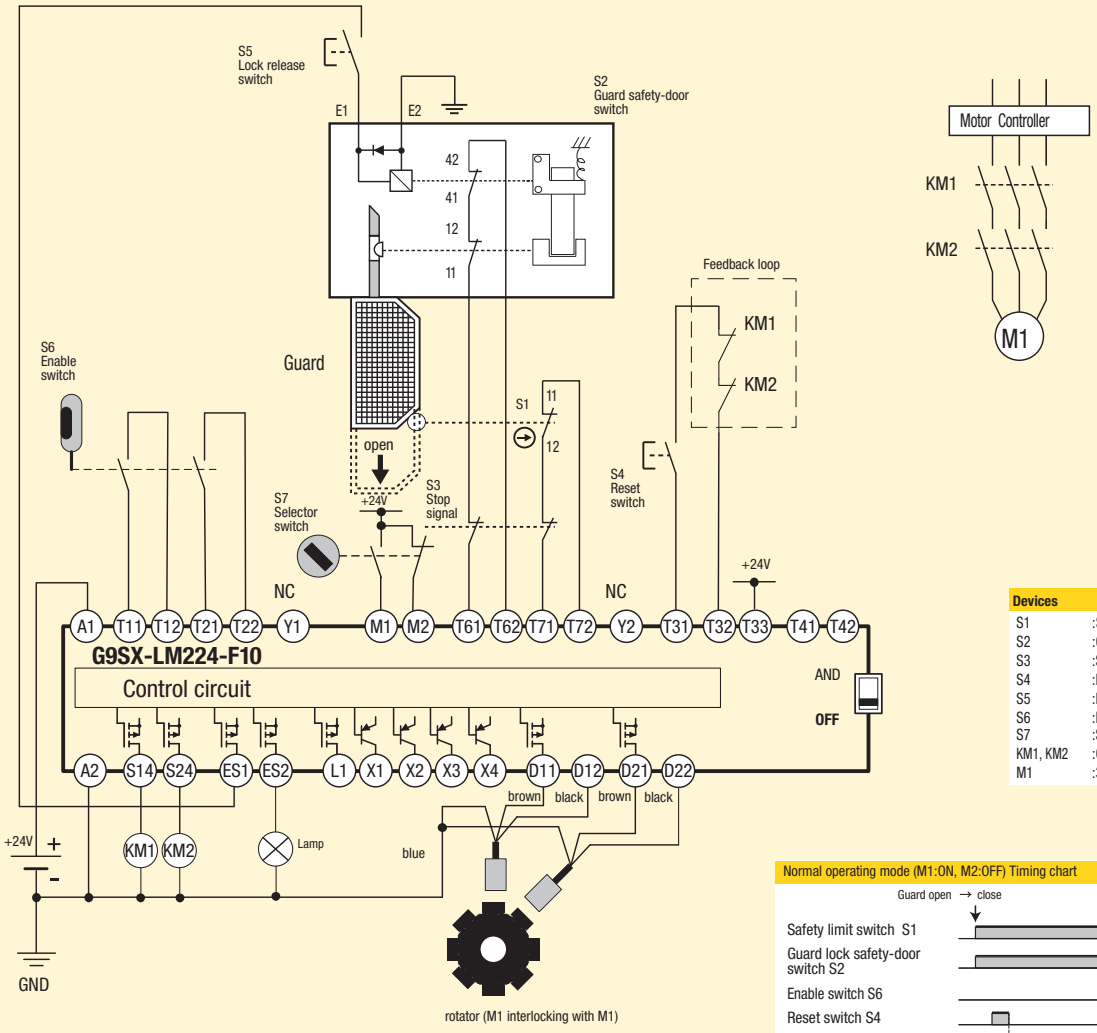

Devices	
S1	:Safety limit switch
S2	:Guard lock safety-door switch
S3	:Stop signal
S4	:Reset switch
S5	:Lock release switch
S6	:Enable switch
S7	:Selector switch
KM1, KM2	:Contactor
M1	:3-phase motor

This example is corresponding to category 3 (EN954-1)

Normal operating mode (M1:ON, M2:OFF) Timing chart

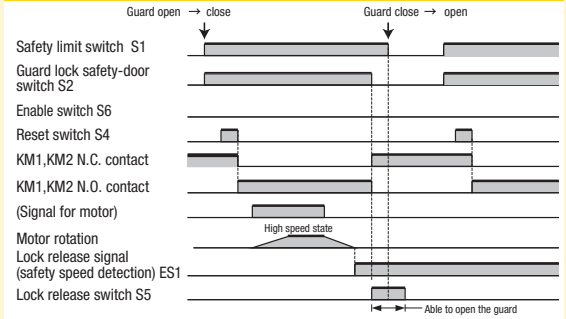

Maintenance mode (M1:OFF, M2:ON) Timing chart

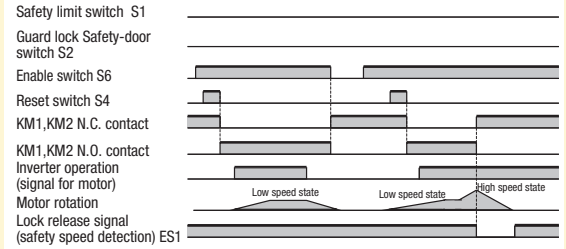

Standalone safety controller

The G9SP safety controller provides all local safety based in- and outputs and controls the safety application.

- Three CPU-types to suit different applications
- Clear diagnosis and monitring via Ethernet or serial connection
- Memory cassette for easy duplication of configuration
- Unique programming software to support easy design, verfication, standardization and reusage of the program.
- Certified according to PLe (EN ISO 13849-1) and SIL 3 (IEC 61508)

Ordering information

Appearance	Appearance description	Order code
Standalone safety controller	10 PNP safety inputs 4 PNP safety outputs 4 test outputs 4 PNP standard outputs	G9SP-N10S
	10 PNP safety inputs 16 PNP safety outputs 6 test outputs	G9SP-N10D
	20 PNP safety inputs 8 PNP safety outputs 6 test outputs	G9SP-N20S

Software

Appearance	Media	Applicable OS	Order code
G9SP configurator	Setup disk 1 license	Windows 2000 Windows XP Windows Vista	WS02-G9SP01-V1
	Setup disk 10 licenses		WS02-G9SP10-V1
	Setup disk 50 licenses		WS02-G9SP50-V1
	Setup disk Site license		WS02-G9SPXX-V1

Expansion units (standard I/O)

Appearance	Type	Number of I/O		Model
		In	Out	
Expansion I/O unit	Sinking	12	8 (solid state)	CP1W-20EDT
	Sourcing	12	8 (solid state)	CP1W-20EDT1
	Sinking	-	32 (solid state)	CP1W-32ET
	Sourcing	-	32 (solid state)	CP1W-32ET1
I/O Connecting cable, 80 cm long				CP1W-CN811

Option units

Appearance	Order code
RS-232 option board	CP1W-CIF01
Ethernet option board (Ver. 2.0 or later)	CP1W-CIF41
Memory cassette	CP1W-ME05M

G9SP configuration

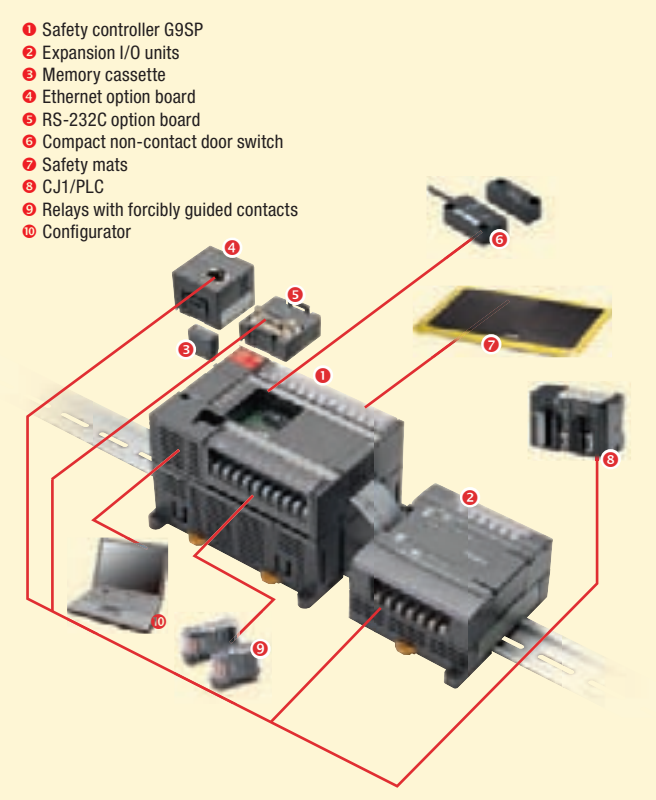

Specifications

General specifications

Power supply voltage		20.4 to 26.4 VDC (24 VDC -15% +10%)
Consumption current	G9SP-N10S	400 mA (V1: 300 mA, V2: 100 mA)
	G9SP-N10D	500 mA (V1: 300 mA, V2: 200 mA)
	G9SP-N20S	500 mA (V1: 400 mA, V2: 100 mA)
Mounting method		35-mm DIN track
Ambient operating temperature		0°C +55°C
Ambient storagetemperature		-20°C +75°C
Degree of protection		IP20 (IEC 60529)

Safety input specifications

Input type	Sinking inputs (PNP)
ON voltage	11 VDC min. between each input terminal and G1
OFF voltage	5 VDC max. between each input terminal and G1
OFF current	1 mA max.
Input current	6 mA

Safety output specifications

Output type	Sourcing outputs (PNP)
Rated output current	0.8 A max. per output*
Residual voltage	1.2 V max. between each output terminal and V2

Test output specifications

Output type	Sourcing outputs (PNP)
Rated output current	0.3 A max. per output*
Residual voltage	1.2 V max. between each output terminal and V1

Standard output specifications (G9SP-N10S)

Output type	Sourcing outputs (PNP)
ON Residual voltage	1.5 V max. (between each output terminal and V2)
Rated output current	100 mA max.*

*For details on the rated output current, please refer to the user manual of G9SP.

Control system integration

Safety - I/O-status becomes transparent

The standalone safety controller offers diagnosis information in 3 ways:
1) via parallel wiring
2) via serial RS232C interface (option)
3) via Ethernet interface (option).
Information of all safety in- and outputs on the standard control system ensure minimum downtime of the machine.

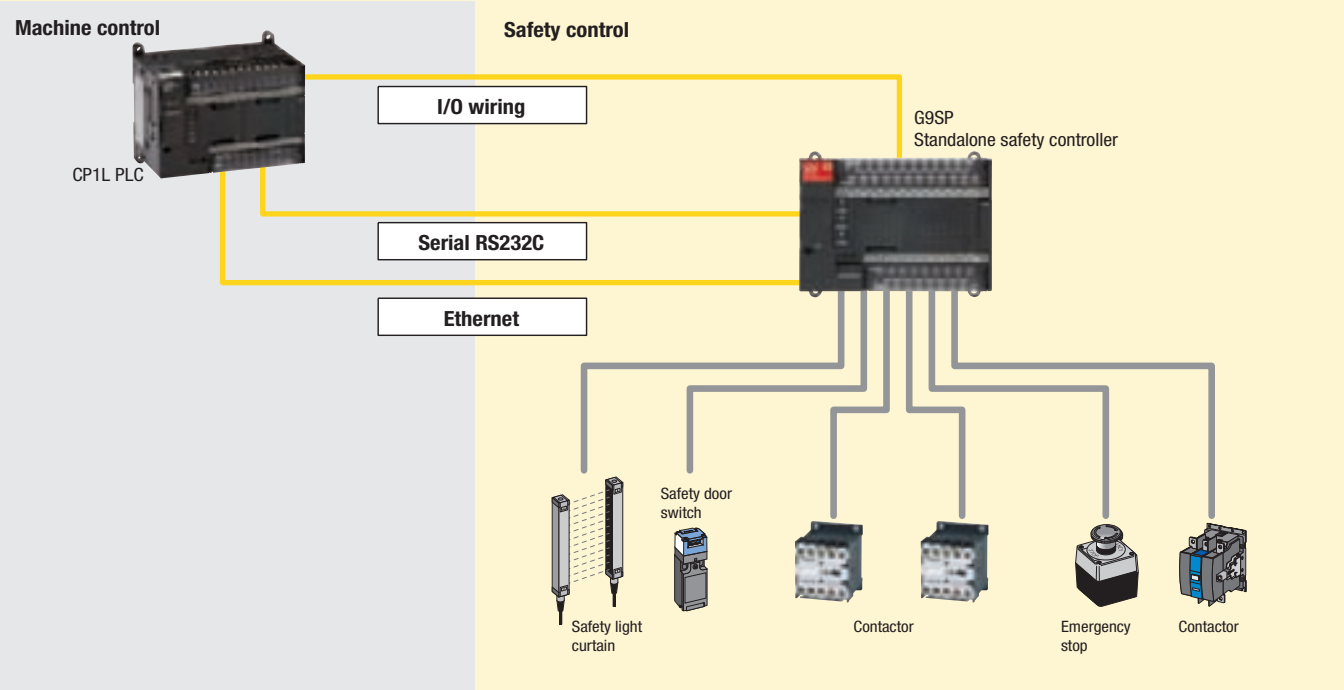

G9SP configuration tool

Easy setup and configuration is provided by a setup wizard supporting the hardware selection.

User-defined function blocks
Approved configuration elements such as a tested door monitoring solution can be easily stored as a user defined function block and re-used in future projects. This minimises the time it takes to create a new system configuration.

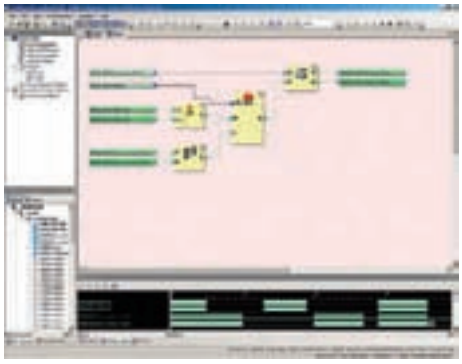

Integrated Simulator
All functions can be tested and simulated in the configuration tool, so there's no unnecessary additional workload for the engineer. In addition, on-line diagnosis reduces debug time to a minimum during implementation in the machine control system.

Knowledge-building
Existing configurations are the basis for new projects. The G9SP configuration tool supports re-use of existing and proven know-how in safety control, as well as user-defined function blocks. Which means no more repetition of effort, instead a growing library of safety solutions.

Standalone controller

The NE0A and NE1A hosts the safety application program. All local safety-based in- and outputs are monitored and controlled by the NE0A and the NE1A-L. It can be seamlessly integrated in a standard DeviceNet system.

- Removable cage-clamp terminals for easy installation
- Predefined and certified function blocks for easy programming
- LED display and status LEDs for advanced diagnostics
- System status on DeviceNet for easy troubleshooting and predictive maintenance
- Portability of configuration to DeviceNet safety bus systems for maximum scalability

Ordering information

Appearance	Appearance description	Order code
Standalone safety controller	12 PNP inputs 6 PNP outputs 2 test outputs removable cage clamp terminals	NE0A-SCPU01
	16 PNP inputs 8 PNP outputs 4 test outputs 254 function block programming removable cage clamp terminals	NE1A-SCPU01L
	40 PNP inputs 8 PNP outputs 8 test outputs 254 function block programming removable cage clamp terminals	NE1A-SCPU02L

Software

Appearance	Appearance description	Order code
Safety network configurator	Installation disk (CD-ROM) IBM PC/AT compatible Windows 2000 or XP (English version)	WS02-CFSC1-E

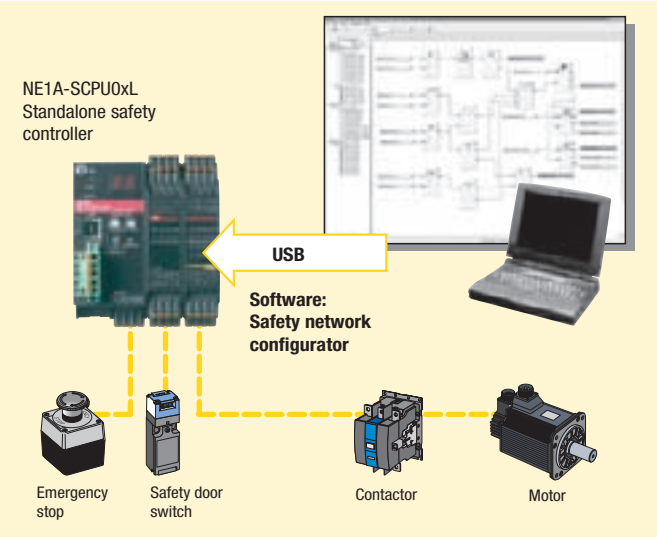

Stand-alone programmable controller

Programmable safety circuits

The standalone safety controller uses predefined logical function blocks to set up the safety system. Modifications of the safety system in the life cycle of a machine are done without tedious wiring.

Specifications

General specifications

DeviceNet communications power supply voltage		11 to 25 VDC (supplied from communications connector)
Unit power supply voltage		20.4 to 26.4 VDC (24 VDC -15% +10%)
I/O power supply voltage		
Consumption current	Communications power supply	24 VDC, 15 mA
	Internal circuit power supply	24 VDC, 230 mA
Mounting method		35-mm DIN track
Ambient operating temperature		-10°C +55°C
Ambient storage temperature		-40°C +70°C
Degree of protection		IP20 (IEC 60529)

Safety input specifications

Input type	Sinking inputs (PNP)
ON voltage	11 VDC min. between each input terminal and G1
OFF voltage	5 VDC max. between each input terminal and G1
OFF current	1 mA max.
Input current	4.5 mA

Safety output specifications

Output type	Sourcing outputs (PNP)
Rated output current	0.5 A max. per output
Residual voltage	1.2 V max. between each output terminal and V2

Test output specifications

Output type	Sourcing outputs (PNP)
Rated output current	0.7 A max. per output (see note.)
Residual voltage	1.2 V max. between each output terminal and V1

Network integration

Safety - I/O-status becomes transparent

The standalone safety controller NE1AxL can be seamlessly integrated in a standard DeviceNet system.
Information of all safety in- and outputs on the standard control system ensure minimum downtime of the machine.

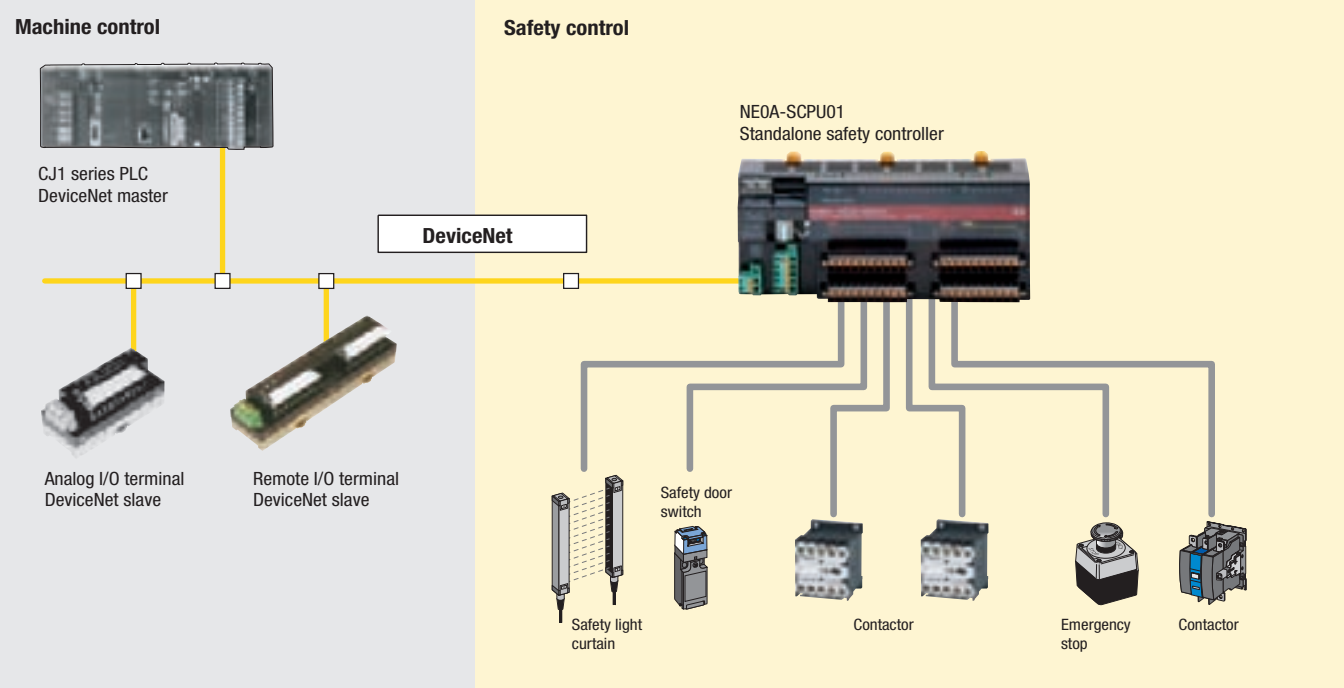

Safety network controller NE1A

The NE1A hosts the safety application program. All local and DeviceNet safety-based in- and outputs are monitored and controlled by the NE1A. It manages up to 32 DeviceNet safety slaves and can be seamlessly integrated in a standard DeviceNet system.

- Removable cage-clamp terminals for easy installation
- Predefined and certified function blocks for easy programming
- LED display and status LEDs for advanced diagnostics
- System status on DeviceNet for easy troubleshooting and predictive maintenance
- Easy scalability through the addition of DeviceNet safety devices

Ordering information

Appearance	Appearance description	Interface	Order code
Safety network controler	16 PNP inputs 8 PNP outputs 4 test outputs 254 function block programming removable cage clamp terminals	USB and DeviceNet safety	NE1A-SCPU01-V1
		Ethernet/IP and DeviceNet safety	NE1A-SCPU01-EIP
	40 PNP inputs 8 PNP outputs 8 test outputs 254 function block programming removable cage clamp terminals	USB and DeviceNet safety	NE1A-SCPU02
		Ethernet/IP and DeviceNet safety	NE1A-SCPU02-EIP

Software

Appearance	Appearance description	Order code
Safety network configurator	Installation disk (CD-ROM) IBM PC/AT compatible Windows 2000 or XP (English version)	WS02-CFSC1-E

Accessories

Appearance	Appearance description	Order code
Network router	Ethernet/IP - DeviceNet router	NE1A-EDR01
Programming console	CF-Card slot to store configuration USB-Interface for maintenance Touchscreen for easy troubleshooting	NE1A-HDY

Specifications

General specifications

DeviceNet communications power supply voltage		**11 to 25 VDC (supplied from communications connector)**
Unit power supply voltage		20.4 to 26.4 VDC (24 VDC -15% +10%)
I/O power supply voltage		
Consumption current	**Communications power supply**	24 VDC, 15 mA
	Internal circuit power supply	24 VDC, 230 mA
Mounting method		35-mm DIN track
Ambient operating temperature		-10°C +55°C
Ambient storage temperature		-40°C +70°C
Degree of protection		IP20 (IEC 60529)

Safety input specifications

Input type	Sinking inputs (PNP)
ON voltage	11 VDC min. between each input terminal and G1
OFF voltage	5 VDC max. between each input terminal and G1
OFF current	1 mA max.
Input current	4.5 mA

Safety output specifications

Output type	Sourcing outputs (PNP)
Rated output current	0.5 A max. per output
Residual voltage	1.2 V max. between each output terminal and V2

Test output specifications

Output type	Sourcing outputs (PNP)
Rated output current	0.7 A max. per output (see note.)
Residual voltage	1.2 V max. between each output terminal and V1

DeviceNet safety I/O terminal block family

- Removable cage clamp terminals for easy installation
- Up to 12 inputs for safety signals
- 4 test pulse outputs to ensure crosstalk and short circuit detection
- Up to 8 safety outputs (solid state or relay)
- Status LEDs for advanced diagnostics
- Mixed mode operation (safety and standard) for all in- and outputs

Ordering information

Safety network

Expand safety I/O through networks

Safety components distributed over many different installation locations required long and complicated wiring.
Replacing the wiring with a network between safety components greatly improves productivity.

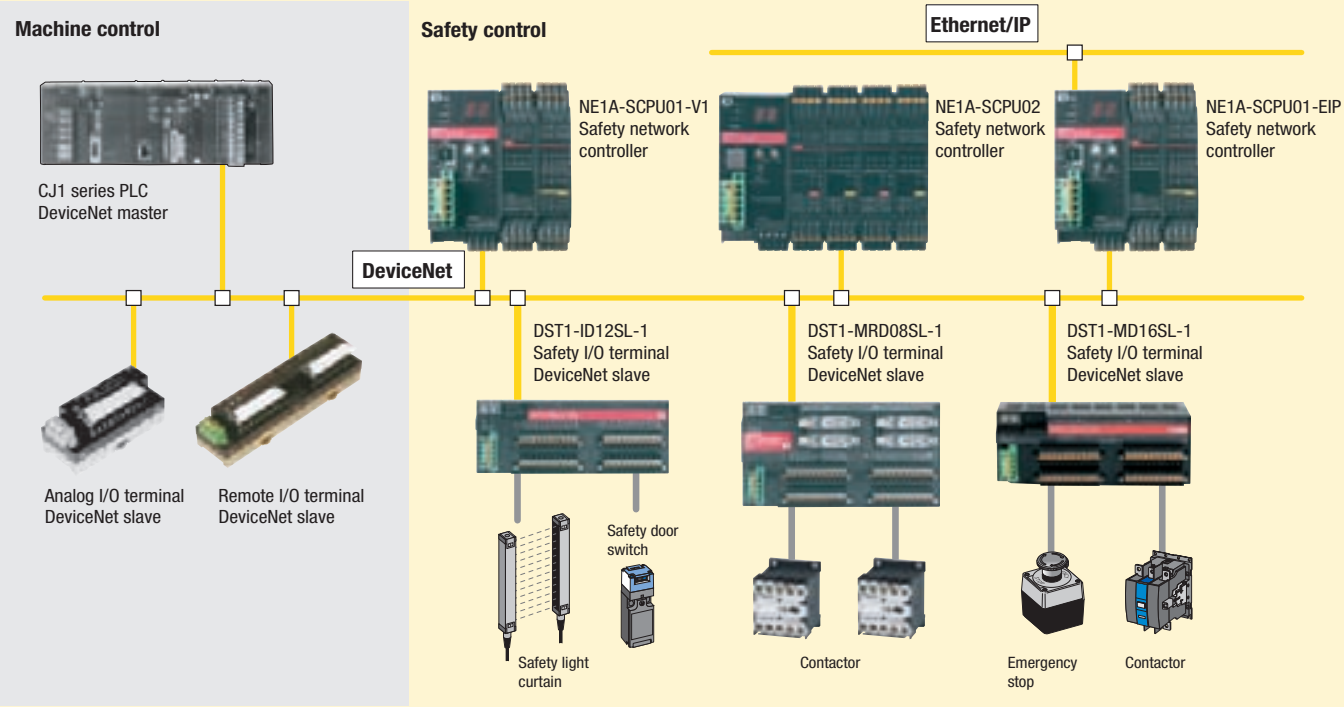

Appearance	Appearance description	Order code
Input terminal	12 PNP inputs 4 Test outputs Removable cage clamp terminals	DST1-ID12SL-1
Mixed I/O terminal	8 PNP inputs 8 PNP outputs 4 Test outputs Removable cage clamp terminals	DST1-MD16SL-1
Mixed I/O terminal	4 PNP inputs 4 relay outputs (4×2-single pole) 4 Test outputs Removable cage clamp terminals	DST1-MRD08SL-1

Specifications

General specifications

DeviceNet communications power supply voltage		11 to 25 VDC (supplied from communications connector)
Unit power supply voltage		20.4 to 26.4 VDC (24 VDC -15% +10%)
I/O power supply voltage		
Consumption current	Communications power supply	DST1-ID12SL-1/MD16SL-1: 100 mA DST1-MRD08SL-1: 110 mA
Mounting method		35-mm DIN track
Ambient operating temperature		-10°C +55°C
Ambient storage temperature		-40°C +70°C
Degree of protection		IP20 (IEC 60529)
Weight		DST1-ID12SL-1/MD16SL-1: 420 g DST1-MRD08SL-1: 600 g

Safety input specifications

Input type	Sinking inputs (PNP)
ON voltage	11 VDC min. between each input terminal and G1
OFF voltage	5 VDC max. between each input terminal and G1
OFF current	1 mA max.
Input current	6 mA

Safety output specifications

Output type	Sourcing outputs (PNP)
Rated output current	0.5 A max. per output
Residual voltage	1.2 V max. between each output terminal and V1

Test output specifications

Output type	Sourcing outputs (PNP)
Rated output current	0.7 A max. per point
Residual voltage	1.2 V max. between each output terminal and V0

Safety output specifications for relay outputs

Relays	G7SA-2A2B, EN 50205 class A
Minimum applicable load	1 mA at 5 VDC
Rated load for a resistive load	240 VAC: 2 A, 30 VDC: 2 A
Rated load for an inductive load	2 A at 240 VAC (cosϕ= 0.3), 1 A at 24 VDC
Mechanical life expectancy	5,000,000 operations min. (switching frequency of 7,200 operations/h)
Electrical life expectancy	100,000 operations min. (at rated load and switching frequency of 1,800 operations/h)

Safety I/O terminals

DST1-ID12SL-1

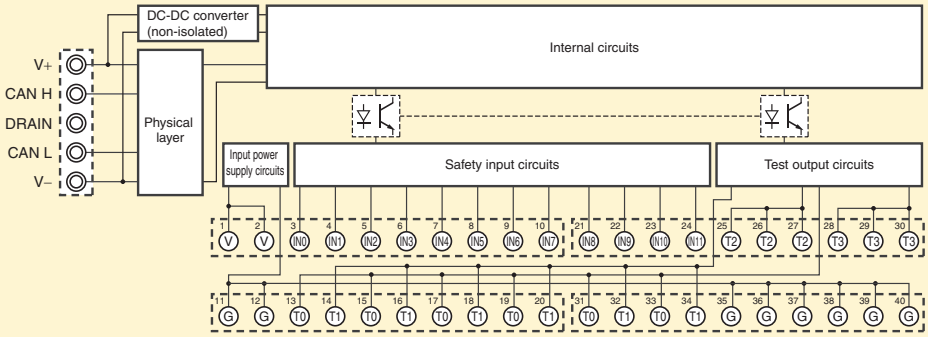

DST1-MD16SL-1

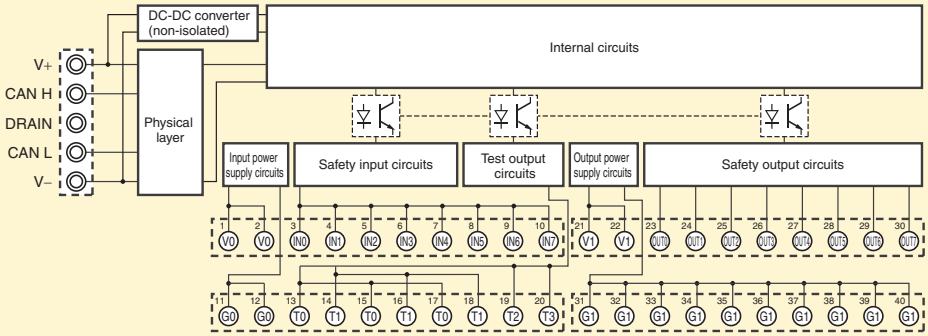

DST1-MRD08SL-1

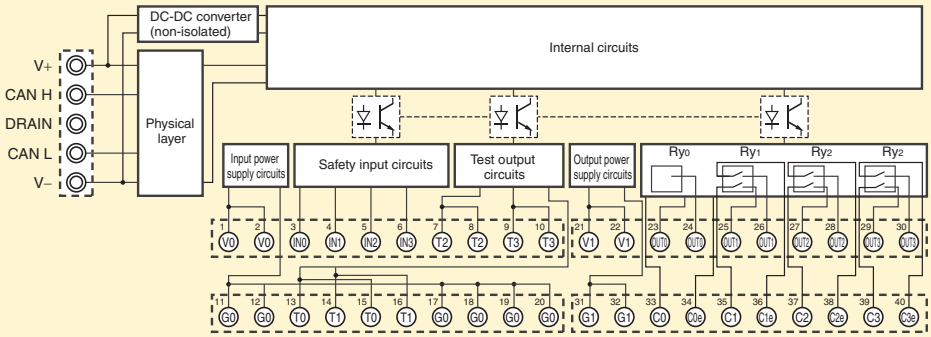

SAFE ACTUATING

Safe and reliable shutdown

Protection of workers is finally achieved when the dangerous condition or movement in the machine is stopped. Omron's relays and contactors with integrated safety function are designed to shutdown the machine reliably and safely.

Quickest and most reliable shutdown as a next step in safety integration is provided by inverters and servo drives with embedded safety function to limit external wiring and effort, maximizing transparency in diagnosis.

Relays and contactors with Safety function

- With forcibly guided contacts

Conformity acc. EN 50205	Up to 6A	4-pole relays 6-pole relays	G7SA  page 111
Conformity acc. EN 60947-4-1	Up to 160A	Contactor with safety function	G7Z  page 112

SAFE CONTROL SYSTEMS

Safety Relay Units		Flexible Safety Units	Safety Controllers	
				
G9SB	G9SA	G9SX	G9SP	NEA1
see page 90	see page 91	see page 96	see page 100	see page 102

Inverters with embedded safety function

- Embedded safety stop function (STO)
- Up to 15kW/18.5kW
- IM and PM motor control

- Speed range up to 1000Hz
- Positioning functionality
- USB interface for PC programming
- Fieldbus communication via Modbus, DeviceNet, Profibus, CompoNet, Ethercat, ML-II and CanOpen

MX2

see page 116

- Built-in filter
- Current vector control
- USB interface for PC programming
- Fieldbus communication via DeviceNet, Profibus, CompopNet and DeviceNet

V1000

see page 113

Servo Drive systems with embedded safety function

- Embedded safety stop function (STO)
- Vibration suppression
- MECHATROLINK-II Motion Network

- Frequency response of 2kHz
- High accuracy provided by built-in 20bit encoder
- Side by side mounting of drives
- Configuration and commissioning using CX-Drive software

Accurax G5

see page 122

- Frequency response of 1.6kHz
- Quick positioning and smooth control

Sigma 5

see page 119

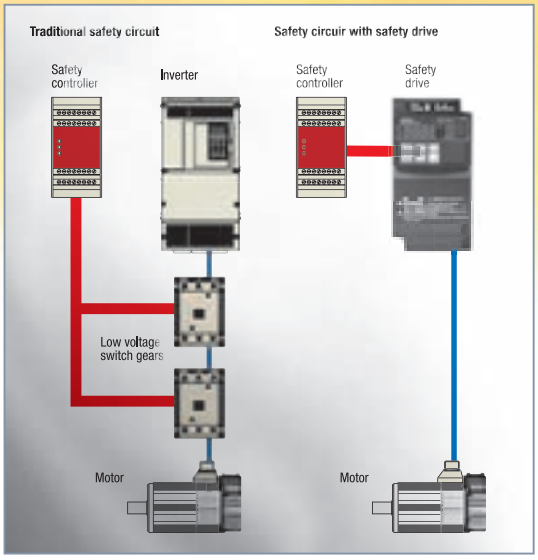

Convenient on-line tuning

Space-saving side-by-side mounting

Benefits of safety drives:
- Faster reaction times – contactors are not necessary any longer
- Reduction of total cost of ownership – design of the circuit is made more simple, wearing elements are removed, wiring is made more simple
- Machine certification is made simpler as all elements have a declaration of conformity

Relays with forcibly guided contacts

The slim G7SA relay family with forcibly guided contacts is available as a four- or six-pole type in various contact combinations and offers reinforced insulation. Terminals are arranged for easy PCB layout. It can be soldered directly to a PCB or used together with the P7SA sockets.

- Forcibly guided contacts
- Conforms to EN 50205
- 6 A at 240 VAC and 6A at 24 VDC for resistive loads
- Reinforced insulation between inputs and outputs and poles
- 4- and 6-pole relays available

Ordering information

Relays with forcibly guided contacts

Type	Sealing	Poles	Contacts	Rated voltage	Order code
Standard	Flux-tight	4 poles	3PST-NO, SPST-NC	24 VDC*1	G7SA-3A1B
			DPST-NO, DPST-NC		G7SA-2A2B
		6 poles	5PST-NO, SPST-NC		G7SA-5A1B
			4PST-NO, DPST-NC		G7SA-4A2B
			3PST-NO, 3PST-NC		G7SA-3A3B

*1 12 VDC, 21 VDC, 48 VDC are available on request.

Sockets

Type		LED indicator	Poles	Rated voltage	Order code
Track-mounting	Track mounting and screw mounting possible	Yes	4 poles	24 VDC	P7SA-10F-ND
			6 poles		P7SA-14F-ND
Back-mounting	PCB terminals	No	4 poles	–	P7SA-10P
			6 poles		P7SA-14P

Specifications

Coil

Rated voltage	Rated current	Coil resistance	Must-operate voltage	Must-release voltage	Max. voltage	Power consumption
24 VDC	4 poles: 15 mA 6 poles: 20.8 mA	4 poles: 1,600 Ω 6 poles: 1,152 Ω	75% max. (V)	10% min. (V)	110% (V)	4 poles: Approx. 360 mW 6 poles: Approx. 500 mW

Note: Refer to datasheet for details

Contacts

Load	Resistive load (cosϕ = 1)
Rated load	6 A at 250 VAC, 6 A at 30 VDC
Rated carry current	6 A
Max. switching voltage	250 VAC, 125 VDC

Load	Resistive load (cosϕ = 1)
Max. switching current	6 A
Max. switching capacity (reference value)	1,500 VA, 180 W

Relays with forcibly guided contacts

Contact resistance		100 mΩ max. (The contact resistance was measured with 1 A at 5 VDC using the voltage-drop method.)
Operating time *1		20 ms max.
Response time *1		10 ms max. (The response time is the time it takes for the normally open contacts to open after the coil voltage is turned OFF.)
Release time *1		20 ms max.
Insulation resistance		100 MΩ min. (at 500 VDC) (The insulation resistance was measured with a 500 VDC megger at the same places that the dielectric strength was measured.)
Dielectric strength *2 *3		Between coil contacts/different poles: 4,000 VAC, 50/60 Hz for 1 min (2,500 VAC between poles 3-4 in 4-pole Relays or poles 3-5, 4-6, and 5-6 in 6-pole Relays.) Between contacts of same polarity: 1,500 VAC, 50/60 Hz for 1 min
Durability	Mechanical	10,000,000 operations min. (at approx. 36,000 operations/hr)
	Electrical	100,000 operations min. (at the rated load and approx. 1,800 operations/hr)
Min. permissible load*4		5 VDC, 1 mA (reference value)
Ambient temperature *5		Operating: -40 to 85°C (with no icing or condensation)
Ambient humidity		Operating: 35 to 85%
Approved standards		EN61810-1 (IEC61810-1), EN50205, UL508, CSA22.2 No. 14

*1 These times were measured at the rated voltage and an ambient temperature of 23°C. Contact bounce time is not included.
*2 Pole 3 refers to terminals 31-32 or 33-34, pole 4 refers to terminals 43-44, pole 5 refers to terminals 53-54, and pole 6 refers to terminals 63-64.
*3 When using a P7SA socket, the dielectric strength between coil contacts/different poles is 2,500 VAC, 50/60 Hz for 1 min.
*4 Min. permissible load is for a switching frequency of 300 operations/min.
*5 When operating at a temperature between 70°C and 85°C, reduce the rated carry current (6 A at 70°C or less) by 0.1 A for each degree above 70°C.

Note: The values listed above are initial values.

Compact 160 Amp Power Relay

G7Z series provides a compact, cost efficient solution for applications such as inverters, UPS, solar and fuel-cell battery circuits. Relay in combination with auxiliary contact block meets EN 60947-4-1. Coil ratings are available in 12 and 24 VDC. Power consumption is less than 4 watts.

- Switching current 160 A (40 A rating / 4-pole / IEC-AC1)
- Switching voltage 440 VAC
- Safety function with mirror contacts in various configurations
- Power consumption less than 4 Watts
- Low switching noise (70 dB)

Ordering information

Relay with auxiliary contact block (for screw terminals)

Contact configuration		Rated voltage	Order code
Relay	Auxiliary contact block		
4PST-NO	DPST-NO	12, 24 VDC	G7Z-4A-20Z
	SPST-NO/SPST-NC		G7Z-4A-11Z
	DPST-NC		G7Z-4A-02Z
3PST-NO/SPST-NC	DPST-NO		G7Z-3A1B-20Z
	SPST-NO/SPST-NC		G7Z-3A1B-11Z
	DPST-NC		G7Z-3A1B-02Z
DPST-NO/DPST-NC	DPST-NO		G7Z-2A2B-20Z
	SPST-NO/SPST-NC		G7Z-2A2B-11Z
	DPST-NC		G7Z-2A2B-02Z

Specifications

Coil ratings

Rated voltage	Rated current	Coil resistance	Must operate voltage	Must release voltage	Max. voltage	Power consumption (approx.)
			% of rated voltage			
12 VDC	333 mA	39 Ω	75% max.	10% min.	110%	Approx. 3.7 W
24 VDC	154 mA	156 Ω				

Note: - Rated current and coil resistance were measured at a coil temperature of 23°C with coil resistance of ±15%.
- Operating characteristics were measured at a coil temperature of 23°C.
- The maximum allowable voltage is the maximum value of the fluctuation range for the relay coil operating power supply and was measured at an ambient temperature of 23°C.

Contact ratings - relay

Item		G7Z-4A-_Z, G7Z-3A1B-_Z, G7Z-2A2B-_Z		
		Resistive load	Inductive load cos phi = 0.3	Resistive load L/R = 1 ms
Contact structure		Double break		
Contact material		Ag alloy		
Rated load	NO	40 A at 440 VAC	22 A at 440 VAC	5 A at 110 VDC
	NC	25 A at 440 VAC	10 A at 440 VAC	5 A at 110 VDC
Rated carry current	NO	40 A	22 A	5 A
	NC	25 A	10 A	5 A
Maximum contact voltage		480 VAC		125 VDC
Maximum contact current	NO	40 A		
	NC	25 A		
Maximum switching capacity	NO	17,600 VA	9,680 VA	550 W
	NC	11,000 VA	4,400 VA	550 W
Failure rate P value (reference value)		2 A at 24 VDC		

Note: The ratings for the auxiliary contact block mounted on the G7Z are the same as those for the G73Z auxiliary contact block.

Contact ratings - auxiliary contact block

Item	G7Z-4A-_Z, G7Z-3A1B-_Z, G7Z-2A2B-_Z		
	Resistive load	Inductive load cos phi = 0.3	Resistive load L/R = 1 ms
Contact structure	Double break		
Contact material	Au clad + Ag		
Rated load	1 A at 440 VAC	0.5 A at 440 VAC	5 A at 110 VDC
Rated carry current	1 A		
Maximum contact voltage	480 VAC		125 VDC
Maximum contact current	1 A		
Maximum switching capacity	440 VA	220 VA	110 W
Failure rate P value (reference value)	1 mA at 5 VDC		

10 x 100 = 1 – Quality has a new formula

Thanks to the patented design of the V1000 series and modern manufacturing, it is built for a 10 year life-time without maintenance. The new features guarantee a 100% expectation match. And with a field failure rate of less than 1 in 10.000, the new V1000 series inverter will outperform all other inverters long after it has been implemented.

- Up to 15 kW / 18.5 kW
- Built-in filter
- Current vector control
- IM and PM motor control
- Embedded safety stop function category 3 (EN954-1)

Ordering information

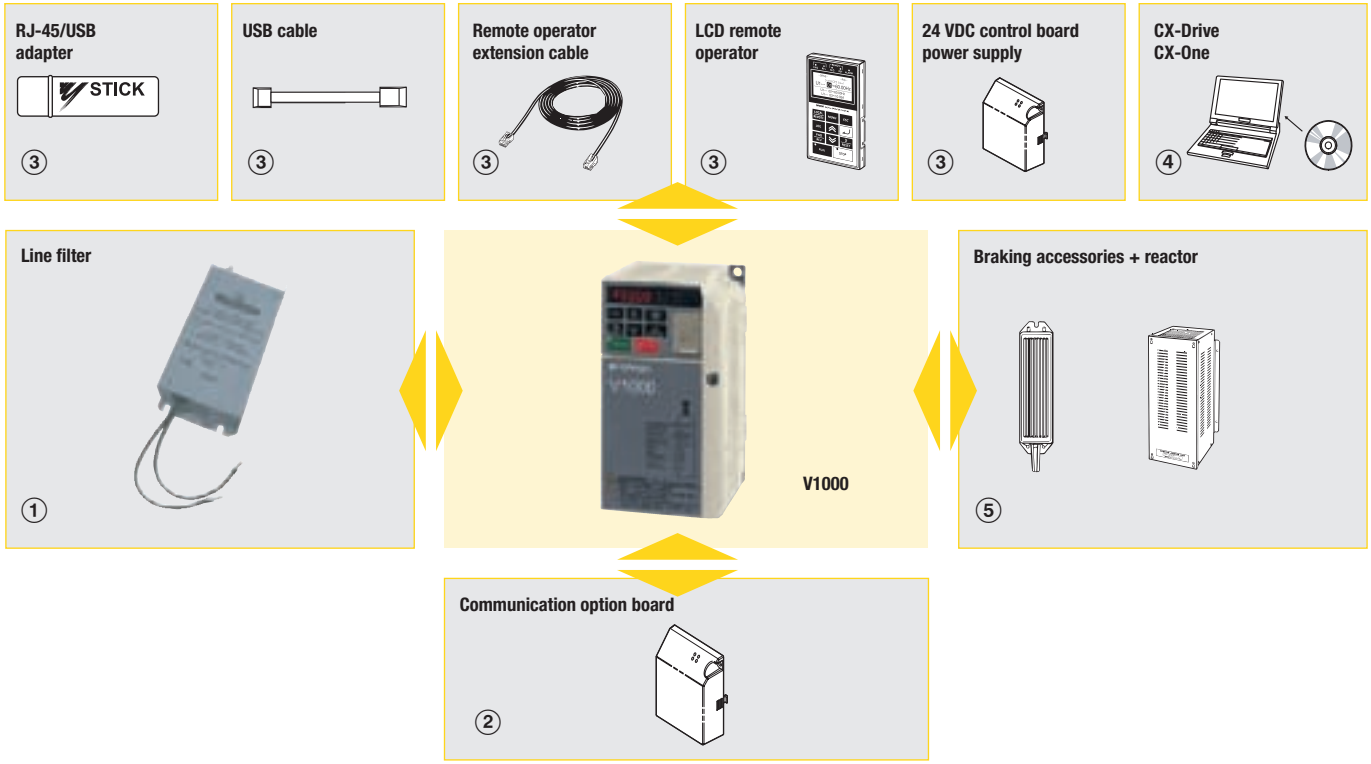

V1000

Specifications					Order code	
Voltage	Heavy duty		Normal duty		Standard	Built-in filter
1x200 V	0.12 kW	0.8 A	0.18 kW	0.8 A	VZAB0P1BAA	VZAB0P1HAA
	0.25 kW	1.6 A	0.37 kW	1.6 A	VZAB0P2BAA	VZAB0P2HAA
	0.55 kW	3.0 A	0.75 kW	3.5 A	VZAB0P4BAA	VZAB0P4HAA
	1.1 kW	5.0 A	1.1 kW	6.0 A	VZAB0P7BAA	VZAB0P7HAA
	1.5 kW	8.0 A	2.2 kW	9.6 A	VZAB1P5BAA	VZAB1P5HAA
	2.2 kW	11.0 A	3.0 kW	12.0 A	VZAB2P2BAA	VZAB2P2HAA
	4.0 kW	17.5 A	5.5 kW	21.0 A	VZAB4P0BAA	VZAB4P0HAA
3x200 V	0.12 kW	0.8 A	0.18 kW	0.8 A	VZA20P1BAA	VZA20P1HAA
	0.25 kW	1.6 A	0.37 kW	1.6 A	VZA20P2BAA	VZA20P2HAA
	0.55 kW	3.0 A	0.75 kW	3.5 A	VZA20P4BAA	VZA20P4HAA
	1.1 kW	5.0 A	1.1 kW	6.0 A	VZA20P7BAA	VZA20P7HAA
	1.5 kW	8.0 A	2.2 kW	9.6 A	VZA21P5BAA	VZA21P5HAA
	2.2 kW	11.0 A	3.0 kW	12.0 A	VZA22P2BAA	VZA22P2HAA
	4.0 kW	17.5 A	5.5 kW	21.0 A	VZA24P0BAA	VZA24P0HAA
	5.5 kW	25.0 A	7.5 kW	30.0 A	VZA25P5FAA	VZA25P5HAA
	7.5 kW	33.0 A	11.0 kW	40.0 A	VZA27P5FAA	VZA27P5HAA
	11 kW	47.0 A	15.0 kW	56.0 A	VZA2011FAA	VZA2011HAA
	15 kW	60.0 A	18.5 kW	69.0 A	VZA2015FAA	VZA2015HAA

Specifications					Order code	
Voltage	Heavy duty		Normal duty		Standard	Built-in filter
3x400 V	0.37 kW	1.2 A	0.18 kW	1.2 A	VZA40P2BAA	VZA40P2HAA
	0.55 kW	1.8 A	0.37 kW	2.1 A	VZA40P4BAA	VZA40P4HAA
	1.1 kW	3.4 A	0.75 kW	4.1 A	VZA40P7BAA	VZA40P7HAA
	1.5 kW	4.8 A	1.1 kW	5.4 A	VZA41P5BAA	VZA41P5HAA
	2.2 kW	5.5 A	2.2 kW	6.9 A	VZA42P2BAA	VZA42P2HAA
	3.0 kW	7.2 A	3.0 kW	8.8 A	VZA43P0BAA	VZA43P0HAA
	4.0 kW	9.2 A	5.5 kW	11.1 A	VZA44P0BAA	VZA44P0HAA
	5.5 kW	14.8 A	7.5 kW	17.5 A	VZA45P5FAA	VZA45P5HAA
	7.5 kW	18.0 A	11.0 kW	23.0 A	VZA47P5FAA	VZA47P5HAA
	11 kW	24.0 A	15.0 kW	31.0 A	VZA4011FAA	VZA4011HAA
	15 kW	31.0 A	18.5 kW	38.0 A	VZA4015FAA	VZA4015HAA

① Line filters

Specifications				Order code	
Power supply	Inverter V1000	Rated current (A)	Weight (kg)	Filter rasmi	Filter schaffner
1x200 V	VZAB0P1BAA	10	0,6	A1000-FIV1010-RE	A1000-FIV1010-SE
	VZAB0P2BAA				
	VZAB0P4BAA				
	VZAB0P7BAA	20	1	A1000-FIV1020-RE	A1000-FIV1020-SE
	VZAB1P5BAA				
	VZAB2P2BAA	30	1,1	A1000-FIV1030-RE	A1000-FIV1030-SE
	VZAB4P0BAA	40	1,2	A1000-FIV1040-RE	A1000-FIV1040-SE
3x400 V	VZA40P2BAA	5	1,1	A1000-FIV3005-RE	A1000-FIV3005-SE
	VZA40P4BAA				
	VZA40P7BAA	10	1,1	A1000-FIV3010-RE	A1000-FIV3010-SE
	VZA41P5BAA				
	VZA42P2BAA				
	VZA43P0BAA			A1000-FIV3020-RE	A1000-FIV3020-SE
	VZA44P0BAA	20	1,3		
	VZA45P5FAA	30	2,1	A1000-FIV3030-RE	A1000-FIV3030-SE
	VZA47P5FAA				
	VZAB011FAA	50	2,9	A1000-FIV1050-RE	Under Development
	VZAB015FAA			A1000-FIV10xx-RE	A1000-FIV10xx-RE
3x200 V	VZA20P1BAA	10	0,8	A1000-FIV2010-RE	A1000-FIV2010-SE
	VZA20P2BAA				
	VZA20P4BAA				
	VZA20P7BAA				
	VZA21P5BAA	20	1,1	A1000-FIV2020-RE	A1000-FIV2020-SE
	VZA22P2BAA				
	VZA24P0BAA	30	1,3	A1000-FIV2030-RE	A1000-FIV2030-SE
	VZA25P5FAA	50	2,4	A1000-FIV2060-RE	Under Development
	VZA27P5FAA				
	VZAB011FAA	100	4,2	A1000-FIV2100-RE	Under Development
	VZAB015FAA				

② Communication cards

Type	Description	Function	Order code
Communication option board	DeviceNet option card	Used for running or stopping the inverter, setting or referencing parameters, and ,monitoring output frequency, output current, or similar items through DeviceNet communication with the host controller.	SI-N3
	PROFIBUS-DP option card	Used for running or stopping the inverter, setting or referencing parameters, and monitoring output frequency, output current, or similar items through PROFIBUS-DP communication with the host controller.	SI-P3
	Can open option card	Used for running or stopping the inverter, setting or referencing parameters, and monitoring output frequency, output current, or similar items through CANopen communication with the host controller.	SI-S3
	CompoNet option card	Used for running or stopping the inverter, setting or referencing parameters, and monitoring output frequency, output current, or similar items through CompoNet communication with the host controller.	A1000-CRT1

③ Accessories

Types	Description	Functions	Order code
Digital operator	LCD remote operator	LCD Display operator with language support	JVOP-180
Accessories	USB converter	USB converter unit with copy and backup function	JVOP-181
	Remote operator cable (1m)	Cable for connecting remote operator	72606-WV001
	Remote operator cable (3m)		72606-WV003
	24 VDC option board	24 VDC control board power supply	PS-UDC24

④ Computer software

Types	Description	Installation	Order code
Software	Computer software	Configuration and monitoring software tool	CX-drive
	Computer software	Configuration and monitoring software tool	CX-One

⑤ Braking unit, braking resistor unit.

Specifications

200 V class

Single-phase: VZ-_		B0P1	B0P2	B0P4	B0P7	B1P5	B2P2	B4P0	–	–	–	–
Three-phase: VZ-_		20P1	20P2	20P4	20P7	21P5	22P2	24P0	25P5	27P5	2011	2015
Motor kW *1	For HD setting	0.12	0.25	0.4	0.75	1.5	2.2	4.0	5.5	7.5	11	15
	For ND setting	0.18	0.37	0.75	1.1	2.2	3.0	5.5	7.5	11	15	18.5
Output characteristics	Inverter capacity kVA	0.3	0.6	1.1	1.9	3.0	4.2	6.7	9.5	13	18	23
	Rated output current (A) at HD	0.8	1.6	3.0	5.0	8.0	11.0	17.5	25.0	33.0	47.0	60.0
	Rated output current (A) at ND	1.2	1.9	3.5	6.0	9.6	12.0	21.0	30.0	40.0	56.0	69.0
	Max. output voltage	Proportional to input voltage: 0 to 240 V										
	Max. output frequency	400 Hz										
Power supply	Rated input voltage and frequency	Single-phase 200 to 240 V 50/60 Hz 3-phase 200 to 240 V 50/60 Hz										
	Allowable voltage fluctuation	-15% to +10%										
	Allowable frequency fluctuation	+5%										

*1 Based on a standard 4-pole motor for maximum applicable motor output:
Constant Torque (CT) mode with a 150% overload capacity
Variable Torque (VT) mode with a 120% overlaod capacity

400 V class

Three-phase: VZ-_		40P2	40P4	40P7	41P5	42P2	43P0	44P0	45P5	47P5	4011	4015
Motor kW*1	For HD setting	0.2	0.4	0.75	1.5	2.2	3.0	4.0	5.5	7.5	11	15
	For ND setting	0.37	0.75	1.5	2.2	3.0	3.7	5.5	7.5	11	15	18.5
Output characteristics	Inverter capacity kVA	0.9	1.4	2.6	3.7	4.2	5.5	7.2	9.2	14.8	18	24
	Rated output current (A) at HD	1.2	1.8	3.4	4.8	5.5	7.2	9.2	14.8	18.0	24	31
	Rated output current (A) at ND	1.2	2.1	4.1	5.4	6.9	8.8	11.1	17.5	23	31	38
	Max. output voltage	0 to 480 V (proportional to input voltage)										
	Max. output frequency	400 Hz										
Power supply	Rated input voltage and frequency	3-phase 380 to 480 VAC, 50/60 Hz										
	Allowable voltage fluctuation	-15% to +10%										
	Allowable frequency fluctuation	+5%										

*1 Based on a standard 4-pole motor for maximum applicable motor output:
Constant Torque (CT) mode with a 150% overload capacity
Variable Torque (VT) mode with a 120% overlaod capacity

Born to drive machines

MX2 has been developed to harmonise advanced motor and machine control. Thanks to its advanced design algorithms the MX2 provides smooth control down to zero speed, plus precise operation for fast cyclic operations and torque control capability in open loop. The MX2 also gives you comprehensive functionality for machine control such as positioning, speed synchronisation and logic programming.

- Current vector control
- Double rating VT 120%/1 min and CT 150%/1 min
- High speed motors up to 1000 Hz and IM & PM motor control
- Torque control in open loop vector
- Positioning functionality
- Built-in application functionality (i.e. brake control)
- Fieldbus comms: Modbus, DeviceNet, PROFIBUS, MECHATROLINK-II, EtherCAT, CompoNet

Ordering information

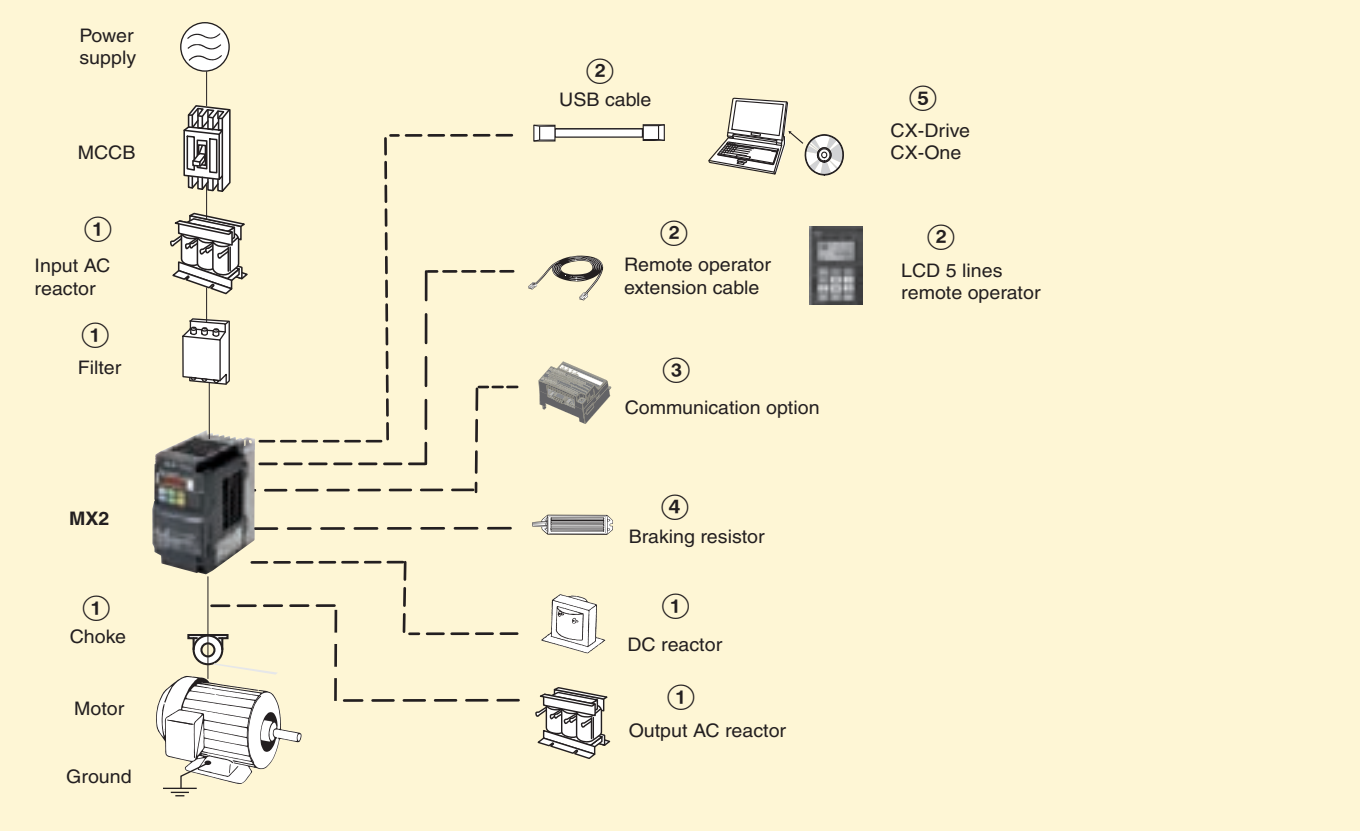

MX2

Voltage class	Constant torque		Variable torque		Order code
	Max motor kW	Rated current A	Max motor kW	Rated current A	Standard
Single-phase 200 V	0.1	1.0	0.2	1.2	MX2-AB001-E
	0.2	1.6	0.4	1.9	MX2-AB002-E
	0.4	3.0	0.55	3.5	MX2-AB004-E
	0.75	5.0	1.1	6.0	MX2-AB007-E
	1.5	8.0	2.2	9.6	MX2-AB015-E
	2.2	11.0	3.0	12.0	MX2-AB022-E
Three-phase 200 V	0.1	1.0	0.2	1.2	MX2-A2001-E
	0.2	1.6	0.4	1.9	MX2-A2002-E
	0.4	3.0	0.55	3.5	MX2-A2004-E
	0.75	5.0	1.1	6.0	MX2-A2007-E
	1.5	8.0	2.2	9.6	MX2-A2015-E
	2.2	11.0	3.0	12.0	MX2-A2022-E
	3.7	17.5	5.5	19.6	MX2-A2037-E
	5.5	25.0	7.5	30.0	MX2-A2055-E
	7.5	33.0	11	40.0	MX2-A2075-E
	11	47.0	15	56.0	MX2-A2110-E
	15	60.0	18.5	69.0	MX2-A2150-E

Voltage class	Constant torque		Variable torque		Order code
	Max motor kW	Rated current A	Max motor kW	Rated current A	Standard
Three-phase 400 V	0.4	1.8	0.75	2.1	MX2-A4004-E
	0.75	3.4	1.5	4.1	MX2-A4007-E
	1.5	4.8	2.2	5.4	MX2-A4015-E
	2.2	5.5	3.0	6.9	MX2-A4022-E
	3.0	7.2	4.0	8.8	MX2-A4030-E
	4.0	9.2	5.5	11.1	MX2-A4040-E
	5.5	14.8	7.5	17.5	MX2-A4055-E
	7.5	18.0	11	23.0	MX2-A4075-E
	11	24.0	15	31.0	MX2-A4110-E
	15	31.0	18.5	38.0	MX2-A4150-E

① Line filters

Inverter		Line filter rasmi	
Voltage	Model MX2-_	Rated current (A)	Reference
1-Phase 200 VAC	AB001/AB002/AB004	10	AX-FIM1010-RE
	AB007	14	AX-FIM1014-RE
	AB015/AB022	24	AX-FIM1024-RE
3-Phase 200 VAC	A2001/A2002/ A2004/A2007	10	AX-FIM2010-RE
	A2015/A2022	20	AX-FIM2020-RE
	A2037	30	AX-FIM2030-RE
	A2055/A2075	60	AX-FIM2060-RE
	A2110	80	AX-FIM2080-RE
	A2150	100	AX-FIM2100-RE
3-Phase 400 VAC	A4004/A4007	5	AX-FIM3005-RE
	A4015/A4022/A4030	10	AX-FIM3010-RE
	A4040	14	AX-FIM3014-RE
	A4055/A4075	23	AX-FIM3030-RE
	A4110/A4150	50	AX-FIM3050-RE

① Input AC reactors

Inverter		AC reactor
Voltage	Model MX2-_	Order code
3-Phase 200 VAC	A2002/A2004/A2007	AX-RAI02800080-DE
	A2015/A2022/A2037	AX-RAI00880200-DE
	A2055/A2075	AX-RAI00350335-DE
	A2110/A2150	AX-RAI00180670-DE
1-Phase 200 VAC	AB002/AB004	Under development
	AB007	
	AB015/AB022	
3-Phase 400 VAC	A4004/A4007/A4015	AX-RAI07700050-DE
	A4022/A4030/A4040	AX-RAI03500100-DE
	A4055/A4075	AX-RAI01300170-DE
	A4110/A4150	AX-RAI00740335-DE

① DC reactors

200V single phase		200V 3-phase		400V 3-phase	
Inverter	Order code	Inverter	Order code	Inverter	Order code
MX2-AB001	AX-RC10700032-DE	MX2-A2001	AX-RC21400016-DE	MX2-A4004	AX-RC43000020-DE
MX2-AB002		MX2-A2002		MX2-A4007	AX-RC27000030-DE
MX2-AB004	AX-RC06750061-DE	MX2-A2004	AX-RC10700032-DE	MX2-A4015	AX-RC14000047-DE
MX2-AB007	AX-RC03510093-DE	MX2-A2007	AX-RC06750061-DE	MX2-A4022	AX-RC10100069-DE
MX2-AB015	AX-RC02510138-DE	MX2-A2015	AX-RC03510093-DE	MX2-A4030	AX-RC08250093-DE
MX2-AB022	AX-RC01600223-DE	MX2-A2022	AX-RC02510138-DE	MX2-A4040	AX-RC06400116-DE
-		MX2-A2037	AX-RC01600223-DE	MX2-A4055	AX-RC04410167-DE
		MX2-A2055	AX-RC01110309-DE	MX2-A4075	AX-RC03350219-DE
		MX2-A2075	AX-RC00840437-DE	MX2-A4011	AX-RC02330307-DE
		MX2-A2011	AX-RC00590614-DE	MX2-A4015	AX-RC01750430-DE
		MX2-A2015	AX-RC00440859-DE	-	

① Chokes

Diameter	Description	Model
21	For 2.2 KW motors or below	AX-FER2102-RE
25	For 15 KW motors or below	AX-FER2515-RE
50	For 45 KW motors or below	AX-FER5045-RE

① Output AC reactor

Inverter		AC reactor
Voltage	Model MX2-_	Order code
200 VAC	A2001/A2002/A2004/ AB001/AB002/AB004	AX-RAO11500026-DE
	A2007/AB007	AX-RAO07600042-DE
	A2015/AB015	AX-RAO04100075-DE
	A2022/AB022	AX-RAO03000105-DE
	A2037	AX-RAO01830160-DE
	A2055	AX-RAO01150220-DE
	A2075	AX-RAO00950320-DE
400 VAC	A4004/A4007/A4015	AX-RAO16300038-DE
	A4022	AX-RAO11800053-DE
	A4030/A4040	AX-RAO07300080-DE
	A4055	AX-RAO04600110-DE
	A4075	AX-RAO03600160-DE

② Accessories

Types	Description	Functions	Order code
Digital operator	LCD remote operator	5 Line LCD remote operator with copy function, cable length max. 3 m	AX-OP05-E
	Remote operator cable	3 meters cable for connecting remote operator	3G3AX-CAJOP300-EE
	LED remote operator	LED remote operator, cable length max. 3 m	3G3AX-OP01
	Mounting kit for LED operator	Mounting kit for LED operator on panel	4X-KITMINI
Accessories	PC configuration cable	Mini USB to USB connector cable	AX-CUSBM002-E

③ Communication option boards

Description	Functions	Model
PROFIBUS option card	Used for running or stopping the inverter, setting or referencing parameters, and monitoring output frequency, output current, or similar items through PROFIBUS communications with the host controller.	3G3AX-MX2-PRT
DeviceNet option card	Used for running or stopping the inverter, setting or referencing parameters, and monitoring output frequency, output current, or similar items through DeviceNet communications with the host controller.	3G3AX-MX2-DRT
Ethercat option card	Under development	3G3AX-MX2-ERT
CompoNet option card	Used for running or stopping the inverter, setting or referencing parameters, and monitoring output frequency, output current, or similar items through CompoNet communications with the host controller.	3G3AX-MX2-CRT
Mechatrolink II option card	Under development	3G3AX-MX2-ML2
CanOpen option card		3G3AX-MX2-CORT

④ Braking unit, braking resistor unit

Inverter					Braking resistor unit					
Voltage	Max. motor kW	Inverter MX2-_		Connectable min. resistance Ω	Inverter mounted type (3 %ED, 10 sec max)		Braking torque %	Inverter mounted type (10%ED, 10 sec max)		Braking torque %
		3-phase	1-phase		Type AX-	Resist Ω		Type AX-	Resist Ω	
200 V (single-/three-phase)	0.12	2001	B001	100	AX-REM00K1400-IE	400	200	AX-REM00K1400-IE	400	200
	0.25	2002	B002				180			180
	0.55	2004	B004		AX-REM00K1200-IE	200	180	AX-REM00K1200-IE	200	180
	1.1	2007	B007	50			100	AX-REM00K2070-IE	70	200
	1.5	2015	B015		AX-REM00K2070-IE	70	140	AX-REM00K4075-IE	75	130
	2.2	2022	B022	35			90	AX-REM00K4035-IE	35	180
	4.0	2040	-		AX-REM00K4075-IE	75	50	AX-REM00K6035-IE	35	100
	5.5	2055	–	20	AX-REM00K4035-IE	35	75	AX-REM00K9020-IE	20	150
	7.5	2075	–	17			55	AX-REM01K9017-IE	17	110
	11	2110	-		AX-REM00K6035-IE	35	40	AX-REM02K1017-IE	17	75
	15	2150	-	10	AX-REM00K9017-IE	17	55	AX-REM03K5010-IE	10	95
400 V (three-phase)	0.55	4004	–	180	AX-REM00K1400-IE	400	200	AX-REM00K1400-IE	400	200
	1.1	4007	–				200			200
	1.5	4015	–		AX-REM00K1200-IE	200	190	AX-REM00K2200-IE	200	190
	2.2	4022	–	100	AX-REM00K2200-IE	200	130	AX-REM00K5120-IE	120	200
	3.0	4030	–		AX-REM00K2120-IE	120	160			160
	4.0	4040	–				120	AX-REM00K6100-IE	100	140
	5.5	4055	–	70	AX-REM00K4075-IE	75	140	AX-REM00K9070-IE	70	150
	7.5	4075	–				100	AX-REM01K9070-IE	70	110
	11	4110	-		AX-REM00K6100-IE	100	50	AX-REM02K1070-IE	70	75
	15	4150	-	35	AX-REM00K9070-IE	70	55	AX-REM03K5035-IE	35	110

⑤ Computer software

Description	Installation	Model
Computer software	Configuration and monitoring software tool	CX-drive
Computer software	Configuration and monitoring software tool	CX-One

Sigma-5 servo drive

The 5-star servo drive. High performance and compact servo family with integrated ML-II.

- Advance autotuning function
- Enhanced vibration supression function
- Standard support for analog voltage/pulse train reference series or MECHATROLINK-II communications reference series.
- Support for direct drive servomotors, linear servomotors and linear sliders
- Integrated safety stop function
- Frequency response of 1.6 kHz

Ordering information

Sigma-5 analog/pulse reference configuration

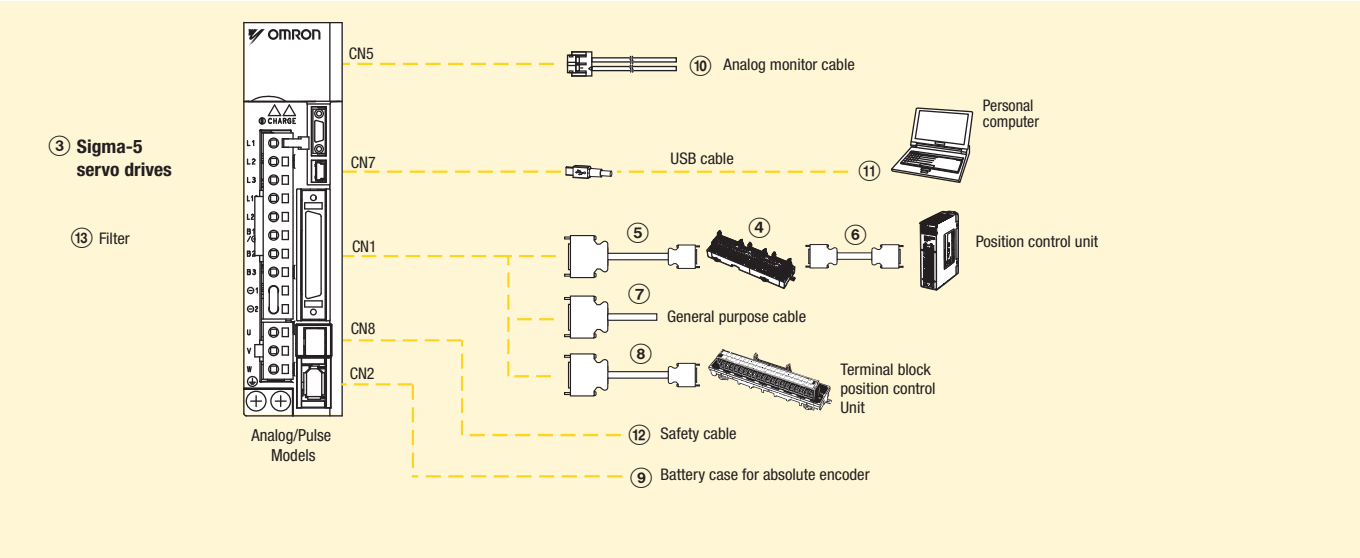

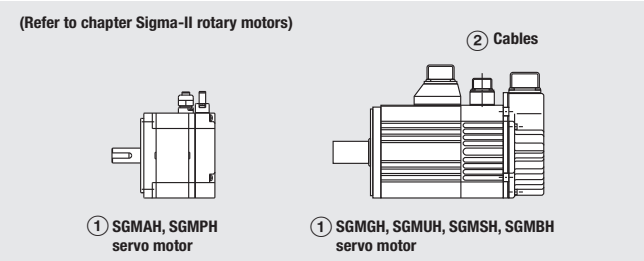

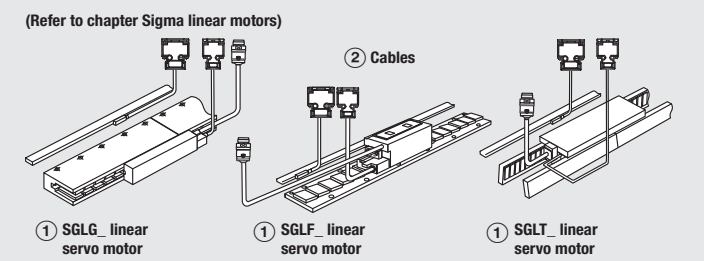

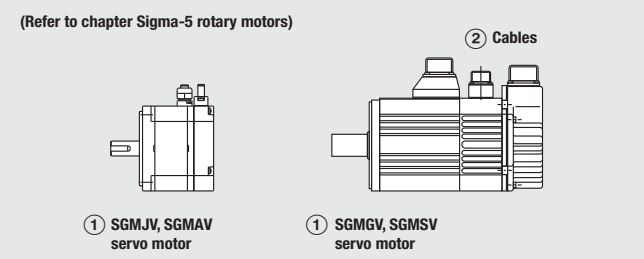

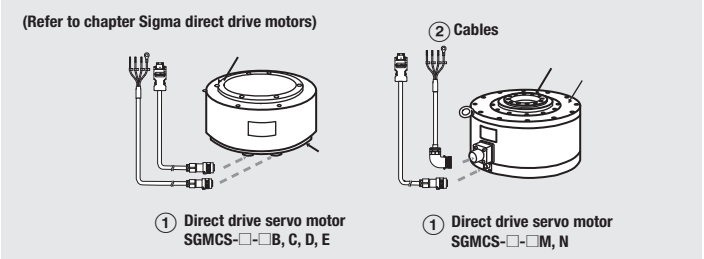

Note: The symbols ①②③④⑤... show the recommended sequence to select the components in a Sigma-5 servo system

Servo motors, power & encoder cables

Note: ①② Refer to the servo motors chapter for detailed motor specifications and selection

Servo drives

Symbol	Specifications		Compatible rotary servo motors ①	Compatible direct drive motors ①	Compatible linear motors ①	Order code
③	1 phase 230 VAC	50 W	SGMAH-A5D_, SGMJV-A5A_, SGMAV-A5A_	-	-	SGDV-R70A01A
			-	-	SGLGW-30A050_	SGDV-R70A05A
		100 W	SGMAH-01A_, SGMPH-01A_, SGMJV-01A_, SGMAV-01A_, SGMEV-01A_	-	-	SGDV-R90A01A
			-	-	SGLGW-30A080_, SGLGW-40A140_	SGDV-R90A05A
		200 W	SGMAH-02A_, SGMPH-02A_, SGMJV-02A_, SGMAV-02A_, SGMEV-02A_	SGMCS-07B_	-	SGDV-1R6A01A
			-	-	SGLGW-60A140_, SGLGW-40A253_, SGLFW-20A_, SGLFW-35A120_	SGDV-1R6A05A
		400 W	SGMAH-04A_, SGMPH-04A_, SGMJV-04A_, SGMAV-04A_, SGMEV-04A_	SGMCS-02B_, SGMCS-05B_, SGMCS-04C_, SGMCS-10C_, SGMCS-14C_, SGMCS-08D_, SGMCS-17D_, SGMCS-25D_	-	SGDV-2R8A01A
			-	-	SGLGW-40A365_, SGLGW-60A253A_	SGDV-2R8A05A
		750 W	SGMAH-08A_, SGMPH-08A_, SGMJV-08A_, SGMAV-08A_, SGMEV-08A_	SGMCS-16E_, SGMCS-35E_	-	SGDV-5R5A01A
			-	-	SGLGW-60A365A_, SGLFW-35A230_, SGLFW-50A200_	SGDV-5R5A05A
		1.5 kW	SGMPH-15A_, SGMAV-10A_, SGMEV-15A_	SGMCS-45M_, SGMCS-80M_, SGMCS-80N_	-	SGDV-120A01A008000
			-	-	SGLGW-90A200A_, SGLFW-50A380_, SGLFW-1ZA200_	SGDV-120A05A008000
	3 phase 400 VAC	0.5 kW	SGMAH-03D_, SGMPH-04D_, SGMGH-05D_, SGMEV-04D_, SGMGV-05D_	-	-	SGDV-1R9D01A
			-	-	SGLFW-35D_	SGDV-1R9D05A
		1.0 kW	SGMAH-07D_, SGMPH-08D_, SGMGH-09D_, SGMSH-10D_, SGMUH-10D_, SGMEV-08D_, SGMGV-09D_, SGMSV-10D_	-	-	SGDV-3R5D01A
			-	-	SGLFW-50D200_, SGLTW-35D170_, SGLTW-50D170_	SGDV-3R5D05A
		1.5 kW	SGMPH-15D_, SGMGH-13D_, SGMSH-15D_, SGMUH-15D_, SGMEV-15D_, SGMGV-13D_, SGMSV-15D_	-	-	SGDV-5R4D01A
			-	-	SGLFW-50D380_, SGLFW-1ZD200_	SGDV-5R4D05A
		2 kW	SGMGH-20D_, SGMSH-20D_, SGMGV-20D_, SGMSV-20D_	-	-	SGDV-8R4D01A
			-	-	SGLFW-1ED380_, SGLTW-35D320_, SGLTW-50D320_	SGDV-8R4D05A
		3 kW	SGMGH-30D_, SGMSH-30D_, SGMUH-30D_, SGMGV-30D_, SGMGV-30D_	-	-	SGDV-120D01A
			-	-	SGLFW-1ZD380_, SGLFW-1ED560_, SGLTW-40D400_	SGDV-120D05A
		5 kW	SGMGH-44D_, SGMSH-50D_, SGMUH-40D_, SGMGV-44D_, SGMSV-50D_	-	-	SGDV-170D01A
			-	-	SGLTW-40D60_, SGLTW-80D400_	SGDV-170D05A
		6 kW	SGMGH-55D_, SGMGV-55D_	-	-	SGDV-210D01A
		7.5 kW	SGMGH-75D_, SGMGV-75D_	-	-	SGDV-260D01A
		11 kW	SGMGH-1AD_, SGMGV-1AD_	-	-	SGDV-280D01A
		15 kW	SGMGH-1ED_, SGMGV-1ED_	-	-	SGDV-370D01A

Control cables (for CN1)

Symbol	Description	Connect to	Length	Order code
④	Servo relay unit	CJ1W-NC1_3		XW2B-20J6-1B (1 axis)
		CJ1W-NC2_3/4_3		XW2B-40J6-2B (2 axis)
		CJ1M-CPU22/23		XW2B-20J6-8A (1 axis)
				XW2B-40J6-9A (2 axis)
⑤	Cable to servo drive	Servo relay units XW2B-_0J6-_B	1 m	XW2Z-100J-B4
			2 m	XW2Z-200J-B4

Symbol	Description	Connect to	Length	Order code
⑥	Position control unit connecting cable	CJ1W-NC113	0.5 m	XW2Z-050J-A14
			1 m	XW2Z-100J-A14
		CJ1W-NC213/413	0.5 m	XW2Z-050J-A15
			1 m	XW2Z-100J-A15
		CJ1W-NC133	0.5 m	XW2Z-050J-A18
			1 m	XW2Z-100J-A18
		CJ1W-NC233/433	0.5 m	XW2Z-050J-A19
			1 m	XW2Z-100J-A19
		CJ1M-CPU22/23	0.5 m	XW2Z-050J-A27
			1 m	XW2Z-100J-A27
⑦	Control cable	For general purpose controllers	1 m	R88A-CPW001S
			2 m	R88A-CPW002S
⑧	Relay terminal block cable	General purpose controller	1 m	R88A-CTW001N
			2 m	R88A-CTW002N
	Relay terminal block		-	XW2B-50G5

Battery backup for absolute encoder (for CN2 encoder cable)

Symbol	Name	Order code
⑨	Battery	JZSP-BA01

Note: When the encoder cables with a battery case are used, no battery is required for CN1 (between pin 21 and 22). Battery for CN1 is ER6VCN3.

Cable (for CN5)

Symbol	Name	Order code
⑩	Analog monitor cable	R88A-CMW001S
		DE9404559

USB personal computer cable (for CN7)

Symbol	Name	Order code
⑪	USB mini connector cable	JZSP-CVS06-02-E

Note: Double shield USB cable recommended

Cable for Safety Functions (for CN8)

Symbol	Name	Order code
⑫	Safety connector with 3 m cable (with loose wires at one end)	JZSP-CVH03-03-E

Note: When using the safety function, connect this cable to the safety devices. Even when not using the safety function, use servo drive with the Safe Jumper Connector (JZSP-CVH05-E) connected.

Filters

Symbol	Applicable servo drive	Rated current	Rated voltage	Order code
⑬	SGDV-R70A__A, SGDV-R90A__A, SGDV-1R6A__A, SGDV-2R8A__A	5 A	250 VAC single-phase	R88A-FI5-1005-RE
	SGDV-5R5A__A	9 A		R88A-FI5-1009-RE
	SGDV-120A01A008000	16 A		R88A-FI5-1016-RE
	SGDV-1R9D__A, SGDV-3R5D__A, SGDV-5R4D__A	4.3 A	400 VAC three-phase	R88A-FI5-3004-RE
	SGDV-8R4D__A, SGDV-120D__A	8.6 A		R88A-FI5-3008-RE
	SGDV-170D__A	14.5 A		R88A-FI5-3012-RE

Connectors

Specifications	Order code
I/O connector kit (for CN1)	R88A-CNU11C
Sigma-5 drive encoder connector (for CN2)	JZSP-CMP9-1
Safe jumper connector	JZSP-CVH05-E

Computer software

Specifications	Order code
Configuration and monitoring software tool for servo drives and inverters. (CX-drive version 1.50 or higher)	CX-drive
Complete OMRON software package including CX-drive. (CX-One version 3.0.2 or higher)	CX-One

Accurax G5 servo drive

Accurate, fast and safe motion control in compact size

Accurax G5 gives you the extra edge to build accurate, faster, smaller and safer machines. You will benefit from an almost 25% reduction in motor weight, and gain 50% cabinet space. You will achieve sub micron precision and ms settling time.

- MECHATROLINK-II and analogue/pulse servo drive models
- Safety conforming ISO13849-1 performance level D
- High response frequency of 2 kHz
- High resolution serial encoder for greater accuracy provided by 20 bits encoder
- External encoder input for full close loop
- Real time auto-tuning
- Advanced tuning algorithms

Ordering information

Accurax G5 series MECHATROLINK-II reference configuration

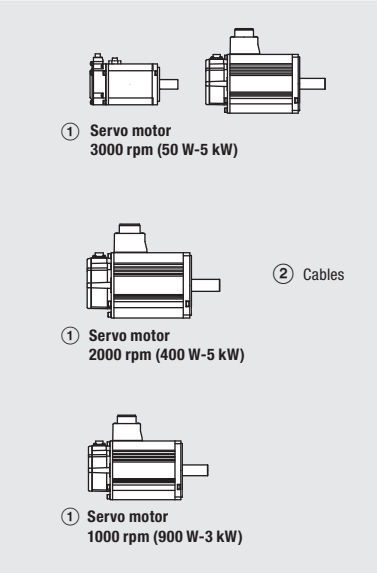

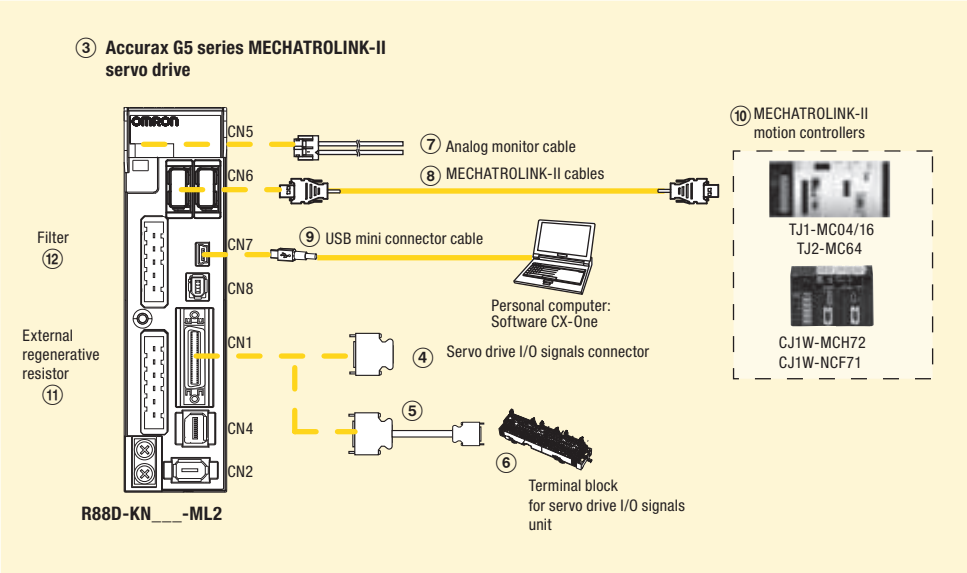

Servo motors, power & encoder cables

Note: ①② Refer to the Accurax G5 servo motor section for servomotor, motor cables or connectors selection

Servo drives

Symbol	Specifications		Servo drive model	① Compatible G5 series rotary servo motors
③	1 phase 230 VAC	100 W	R88D-KN01H-ML2	R88M-K05030(H/T)-_
				R88M-K10030(H/T)-_
		200 W	R88D-KN02H-ML2	R88M-K20030(H/T)-_
		400 W	R88D-KN04H-ML2	R88M-K40030(H/T)-_
		750 W	R88D-KN08H-ML2	R88M-K75030(H/T)-_
		1.0 kW	R88D-KN10H-ML2	R88M-K1K020(H/T)-_
		1.5 kW	R88D-KN15H-ML2	R88M-K1K030(H/T)-_
				R88M-K1K530(H/T)-_
				R88M-K1K520(H/T)-_
				R88M-K90010(H/T)-_

Symbol	Specifications		Servo drive model	① Compatible G5 series rotary servo motors
③	3 phase 400 VAC	600 W	R88D-KN06F-ML2	R88M-K40020(F/C)-_
				R88M-K60020(F/C)-_
		1.0 kW	R88D-KN10F-ML2	R88M-K75030(F/C)-_
				R88M-K1K020(F/C)-_
		1.5 kW	R88D-KN15F-ML2	R88M-K1K030(F/C)-_
				R88M-K1K530(F/C)-_
				R88M-K1K520(F/C)-_
				R88M-K90010(F/C)-_
		2.0 kW	R88D-KN20F-ML2	R88M-K2K030(F/C)-_
				R88M-K2K020(F/C)-_
		3.0 kW	R88D-KN30F-ML2	R88M-K3K030(F/C)-_
				R88M-K3K020(F/C)-_
				R88M-K2K010(F/C)-_
		5.0 kW	R88D-KN50F-ML2	R88M-K4K030(F/C)-_
				R88M-K5K030(F/C)-_
				R88M-K4K020(F/C)-_
				R88M-K5K020(F/C)-_
				R88M-K3K010(F/C)-_

Control cables (for CN1)

Symbol	Description	Connect to	Length	Model
④	I/O connector kit (26 pins)	For I/O general purpose	-	R88A-CNW01C
⑤	Terminal block cable		1 m	XW2Z-100J-B34
			2 m	XW2Z-200J-B34
⑥	Terminal block (M3 screw and for pin terminals)		-	XW2B-20G4
	Terminal block (M3.5 screw and for fork/round terminals)		-	XW2B-20G5
	Terminal block (M3 screw and for fork/round terminals)		-	XW2D-20G6

Analogue monitor (for CN5)

Symbol	Name	Length	Model
⑦	Analogue monitor cable	1m	R88A-CMK001S

MECHATROLINK-II cables (for CN6)

Symbol	Specifications	Length	Model
⑧	MECHATROLINK-II Terminator resistor	-	JEPMC-W6022-E
	MECHATROLINK-II cables	0.5 m	JEPMC-W6003-A5-E
		1 m	JEPMC-W6003-01-E
		3 m	JEPMC-W6003-03-E
		5 m	JEPMC-W6003-05-E
		10 m	JEPMC-W6003-10-E
		20 m	JEPMC-W6003-20-E
		30 m	JEPMC-W6003-30-E

USB personal computer cable (for CN7)

Symbol	Name	Length	Model
⑨	USB mini-connector cable	2m	AX-CUSBM002-E

MECHATROLINK-II Motion controllers

Symbol	Name	Model
⑩	Trajexia stand-alone motion controller	TJ1-MC04 (4 axes)
		TJ1-MC16 (16 axes)
		TJ2-MC64 (64 axes)
	Trajexia-PLC motion controller	CJ1W-MCH72
	Position Controller Unit for CJ1 PLC	CJ1W-NCF71 (16 axes)
		CJ1W-NC471 (4 axes)
		CJ1W-NC271 (2 axes)
	Position Controller Unit for CS1 PLC	CS1W-NCF71 (16 axes)
		CS1W-NC471 (4 axes)
		CS1W-NC271 (2 axes)

External regenerative resistor

Symbol	Specifications	Model
⑪	50 Ω, 80 W	R88A-RR08050S
	100 Ω, 80 W	R88A-RR080100S
	47 Ω, 220 W	R88A-RR22047S
	20 Ω, 500 W	R88A-RR50020S

Filters

Symbol	Applicable servodrive	Rated current	Leakage current	Rated voltage	Model
⑫	R88D-KN01H-ML2, R88D-KN02H-ML2	2.4 A	3.5 mA	250 VAC single-phase	R88A-FIK102-RE
	R88D-KN04H-ML2	4.1 A	3.5 mA		R88A-FIK104-RE
	R88D-KN08H-ML2	6.6 A	3.5 mA		R88A-FIK107-RE
	R88D-KN10H-ML2, R88D-KN15H-ML2	14.2 A	3.5 mA		R88A-FIK114-RE
	R88D-KN06F-ML2, R88D-KN10F-ML2, R88D-KN15F-ML2	4 A	0.3 mA / 32 mA*1	400 VAC three-phase	R88A-FIK304-RE
	R88D-KN20F-ML2	6 A	0.3 mA / 32 mA[1]		R88A-FIK306-RE
	R88D-KN30F-ML2, R88D-KN50F-ML2	12.1 A	0.3 mA / 32 mA[1]		R88A-FIK312-RE

*1 Momentary peak leakage current for the filter at switch-on/off.

Connectors

Specifications	Model
External encoder connector (for CN4)	R88A-CNK41L
Safety I/O signal connector (for CN8)	R88A-CNK81S

Computer software

Specifications	Model
Configuration and monitoring software tool for servo drives and inverters. (CX-drive version 1.91 or higher)	CX-drive

1. Risk assessment – why and how

Machine Directive 2006/42/EC stipulates that machinery should not present a risk to persons working in an industrial area, to property or to domestic animals. To fulfill this basic requirement, the most basic task in providing a usable and safe machine is to perform a risk assessment according to EN ISO 14121-1, which is mandatory for new machines and also for machines that are restored (e.g. integrate a new PLC system into an existing machine).

To give an overview, the basic principle is shown below. Of course, this is just a part of the whole process. To fully comply to the requirements of machine directive, please consider EN ISO 14121-1 and all other relevant standards completely when performing the risk assessment.

EN ISO 14121-1 covers the whole process of the risk assessment (five-step method):

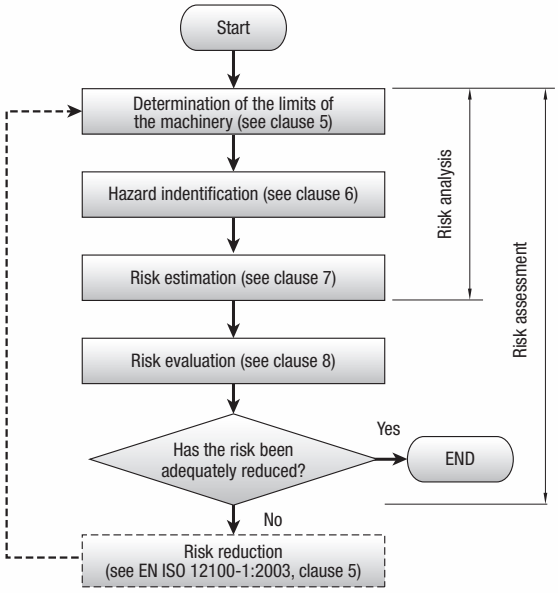

Step 1: Determination of the limits of the machinery

First step in the risk assessment process is the determination of the limits of the machinery, taking into account all the phases of the machinery life. To define the limits of a machine, it's necessary to know the process, the people involved, the environment and finally the products. Every machine has certain areas where limitations can exist, like limitations in use, in space, in time or in environmental aspects.

Step 2: Hazard identification

Essential step in the whole process is the identification of the foreseeable hazards since it is assumed that a hazard sooner or later will lead to a harm if no countermeasures are taken. EN ISO 14121-1 includes a list of examples for different types or groups of hazards like mechanical hazards, electrical hazards, thermal hazards, etc. that need to be considered in this step.

Step 3: Risk estimation

In this step, the risk for the user of the machinery is estimated, based on the severity of the harm and the probability of occurrence. In this part it's not only the technical issues to be covered. Since there are humans, there is also a part of the risk based on the human factors and – unfortunately – another part how a possibility to defeat the safety measures in the machinery is misused by the operation personal.

Step 4: Risk evaluation

As a part of the whole iterative process, it is mandatory to evaluate if the introduction of measures to reduce the risk leads to new hazards or hazardous conditions. If so, they need to be added to the whole documentation and suitable protective measures should be taken.

Step 5: Risk reduction

After identification, estimation and evaluation, finally the risk reduction needs to be done, following a hierarchy of measures:

- Eliminating or reduce hazards by design and construction.
- Use technical protection devices and additional potential protective measure.
- Reduce the risk by user information (manuals, pictograms, light, sound etc.).

Finally all these measures to protect workers should not lead to a machine that is not usable any more. If protective measures just hinder the worker in production, they will find a way to cheat the safety system – and are in a more risky situation as it would be without the safety measures. Designers of machinery should combine the production friendly thinking with the ideas of risk assessment, so they should think about:

- how the safety system works in all machine operation modes
- accessibility of machine parts in maintenance (use doors with interlocking instead of guards with mechanical fixing)
- a safe area to observe production without stopping the machine
- a clever routine to restart production after a stop from the safety system

Additional information and support is available through the Omron sales network and our specialized Omron safety partners.

2. Explanation of direct opening

A basic design principle of E-Stops, Safety limit switches and Safety door switches is the direct or positive opening of contacts. A description of this design principle can be found in EN 60947-5-1:

The switch contacts must withstand the impulse voltage specified by EN 60947-5-1 when the contacts have been forcibly opened with the positive operating force (POF) and positive over-travel (POT) exceeding the contact welding force, which is equivalent to 10N.

The switch relies on spring pressure to close the contacts when the guard is in the closed position (or the Emergency stop pushbutton is not pressed). If the spring fails, the switch always will fail to a safe condition because the mechanical design ensures opening of the contacts just by the movement of the actuator.

Example: Safety limit switch

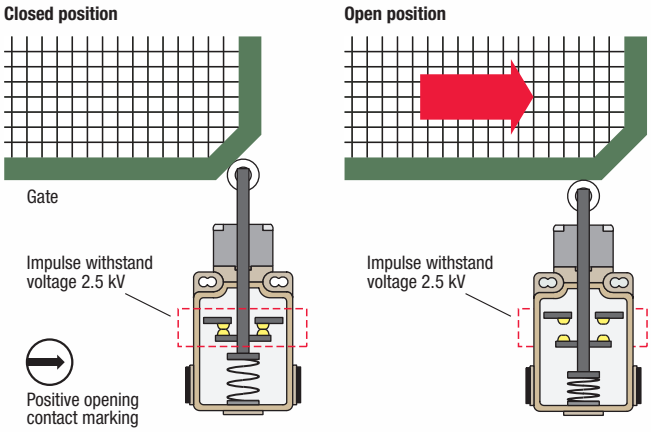

If a switch complies with the requirements for direct or positive opening, this symbol can be found on the product:

Related products			
Emergency stop pushbuttons	**Rope pull switches**	**Safety limit switches**	**Safety door switches**
A22E, A165E	ER-series	D4N, D4BN, D4NH, D4F	D4NS, D4BS, D4GS, D4GL, D4NL, D4BL

3. Emergency Stop

Machines must be fitted with one or more emergency stop devices to enable danger to be averted (see EN ISO 13850). These are most commonly provided in the form of a manual pushbutton assembly which an operator strikes in an emergency. The pushbutton is clearly visible with red/yellow coloring and will stop the dangerous process as quickly as possible, without creating additional hazards.

Example of an Emergency stop pushbutton:

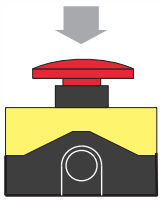

Emergency stop pushbutton

Another way to set up this function is by using rope pull switches. They provide the Emergency Stop function along the whole rope span.

Example of a rope pull switch

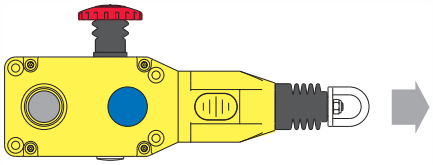

Rope pull switches

Application on a conveyor system

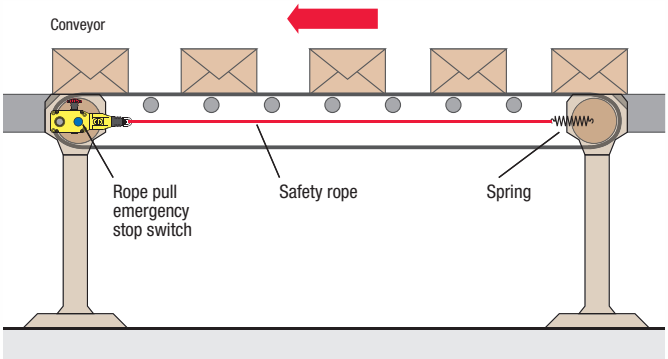

Both systems require a manual or key-operated reset to enable a safety check of the system to be performed prior to restarting the machine. So the reset of the safety system and restart of the machine are separate functions since the Machine Directive requires that a reset of the safety system shall not initiate a restart of the machine.

Related products	
Emergency stop pushbuttons	**Rope pull switches**
A22E, A165E	ER-series

4. Application hints on Safety limit switches and Key operated switches

If the hazard is on a part of the machine which does not require access, it should be permanently guarded with fixed guards.

Movable guard safety devices are used in the following situations:

- Intervention into the hazardous area to operate the machine
- Adjustments in the machine
- Troubleshooting situations
- Maintenance

In some applications, access to hazardous areas is only allowed after the machine has come to a complete standstill. Safety door switches with integrated locking function protect workers in these areas.

According to the Machine Directive, a safety device has to be solidly designed, impose no further risks and may not easily be overridden or manipulated.

To support these requirements correct mounting of the safety limit switches is mandatory. If mounting is not correct, a failure of the switch may lead to a dangerous condition since the position of the guard is not monitored.

Examples for incorrect and correct mounting of Safety Limit Switches:

Movable guard closed position

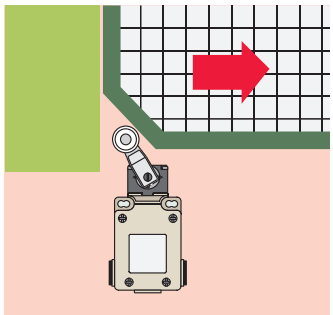

Wrong: Switch is not automatically activated when opening the safety devices.

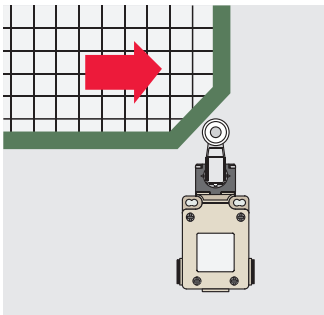

Right: Switch is automatically activated.

Movable guard open position

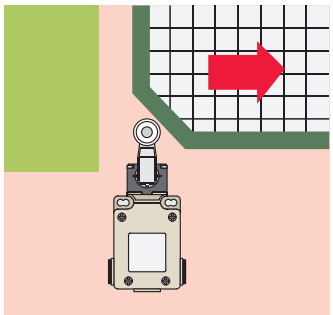

Wrong: Switch is not automatically activated when opening the safety devices.

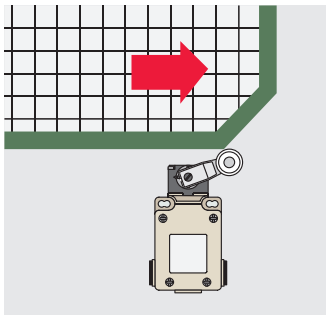

Right: Switch is automatically activated.

Related products
Safety limit switches
D4N, D4BN, D4NH, D4F

Examples for key-operated switches:

Guard closed position

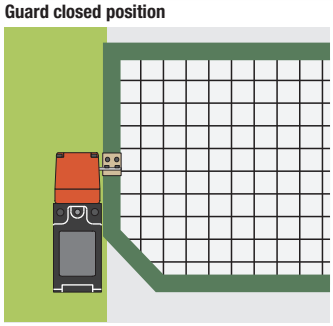

Guard open position

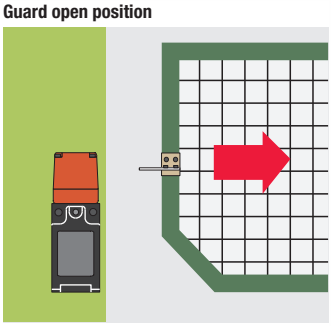

By means of a separated actuator the switch is automatically activated.

Related products
Safety door switches
D4NS, D4BS, D4GS, D4GL, D4NL, D4BL

Technical information

To support fast and easy wiring in electrical installation, three different types of housing are used.

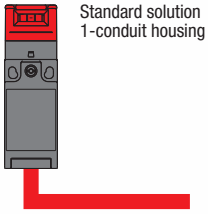

Standard solution
1-conduit housing

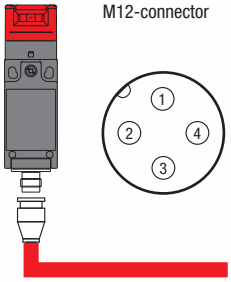

M12-connector

For plug-and play solution and easy maintenance

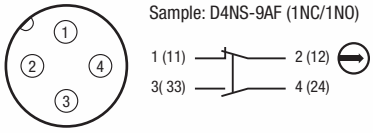

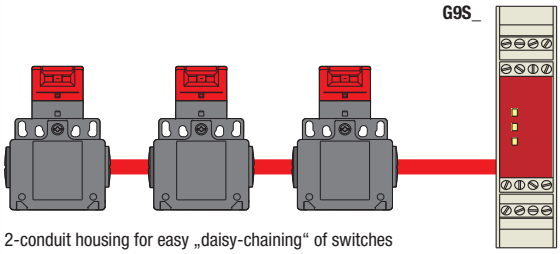

2-conduit housing for easy „daisy-chaining“ of switches

5. Application of non-contact switches

Monitoring of guards or doors can also be achieved by using non-contact switches. The system is made of an actuator (a combination of magnets) and a sensing element:

Working without physical contact of actuator and sensing element, the switch cannot generate particles due to abrasion, which is e.g. a basic requirement in food processing.

Non-contact switches are commonly used in packaging machines and when it comes to food or pharmaceutical industries, machine parts are mainly made of stainless steel. Non-contact switches are often placed behind machine covers so that the effects of cleaning will not damage them. Therefore an operation range of more than 10mm ensures flexibility in application and coverage of mechanical tolerances.

Non-contact switches are based on two electromechanical/ electronic principles:

- Magnetic Reed Contact
  A Reed Contact is used to sense if the actuator is close to the sensing element. These reed contacts close when the actuator is there and they open when the actuator is removed. For safety applications, special design measures are taken to ensure a behavior similar to direct opening. Magnetic reed contacts are able to carry high electric loads without using additional relays or contactors.
- Hall effect sensors
  These are electronic circuits and sense the magnetic field of the actuator. Hall-effect sensors are free of wear and tear, so they ensure a very long lifetime of the switch together with electronic safety outputs.

Related products	
TGR-non-contact switches	**Vibration tolerant system**
F3S-TGR-N_R F3S-TGR-N_C	D40A + G9SX-NS

6. Application of Safety Sensors

Safety sensors are photoelectric switches with transmitting and receiving elements and integrated safety function. Requirements for all the different types of safety sensors are set in EN 61496.

If safety sensors are used, it is mandatory to check if the hazard really can be protected by an optoelectronic device. There are many applications where parts can be ejected from a machine, causing severe harm to persons hit by these projectiles. A fence or guard is the better solution for these areas.

Safety sensors are based on a through-beam principle, having a separate transmitter and receiver. If there is no object in the sensing distance, the outputs will be ON, if the sensing area is blocked, the outputs will be in OFF condition.

To detect fingers, hands or the entire body, there are different setups of safety sensors available. This setup of the optical beams is characterized as the resolution of the safety sensor, indicating the smallest object that can be “seen“.

Where frequent access to a process is a demand, the use of safety sensors is the most efficient combination of protecting workers and high productivity.

Safety Sensors can be used to detect parts of the human body, like fingers or hands, or the entire human body. Data showing the standard parameters can be found in EN ISO13852 and EN ISO 13853.

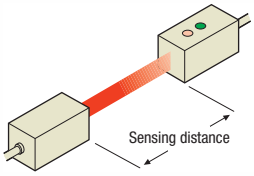

Finger protection (14 mm resolution):

This system is able to detect one single finger and stop the machine if an object of that size is in the protected area.
Since the minimum object is very small, the intrusion into the dangerous zone is also very small and the distance to the hazard can be small as well.
Press- or stamping machines require this type of safety sensor in the related standard.

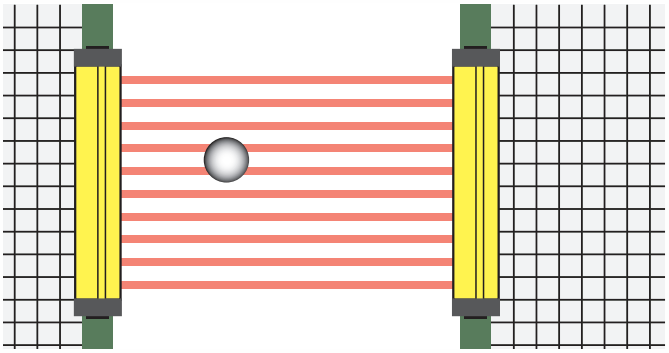

Hand protection (20 - 35 mm resolution):

This system is able to detect a hand and stop the machine if an object of that size is in the protected area.
Since the minimum object is a now in the size of a hand, the distance to the hazard needs to be bigger than for the finger protection.
Packaging machines require this type of safety sensor for many applications in the related standard.

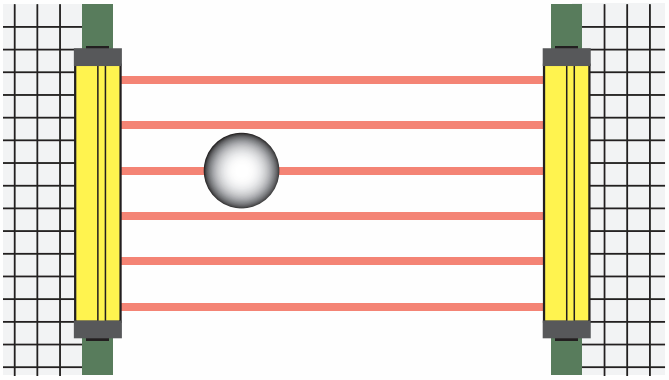

Body protection:

This setup is able to detect the entire human body. It is used in applications, where a person can walk into a dangerous area.
Applications in storage and conveying industry often require this functionality together with special functions like muting.

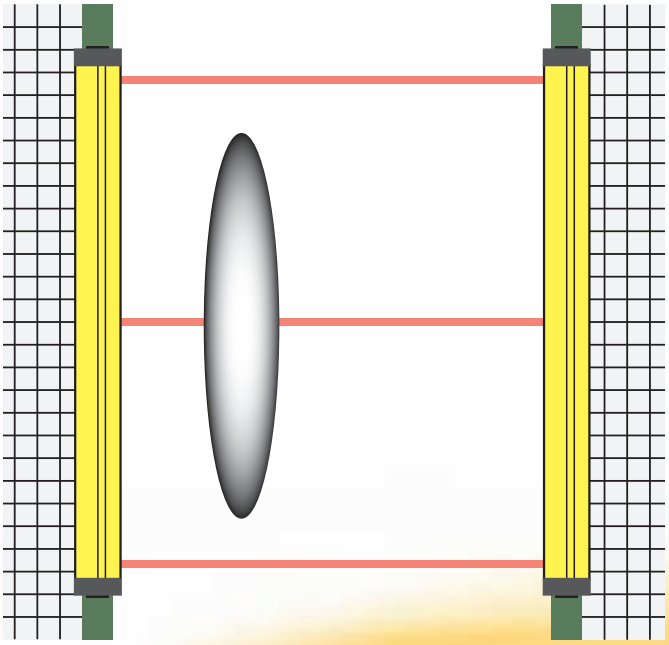

Technical information

To ensure that the machine is stopped before the worker can reach the hazardous zone, all safety sensors need to be mounted in a proper distance.
The safety distance "S" is the minimum safe distance between the safety sensor and the point of operation.
Calculation of the safety distance "S" is based on the European standard EN999/ISO13855 and applies to safety light curtains that are used in industrial environments.

Safety distance for safeguarding danger points:

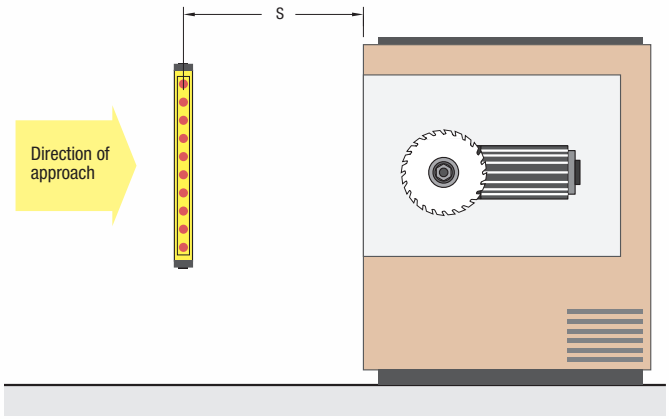

Safety distance for safeguarding danger areas:

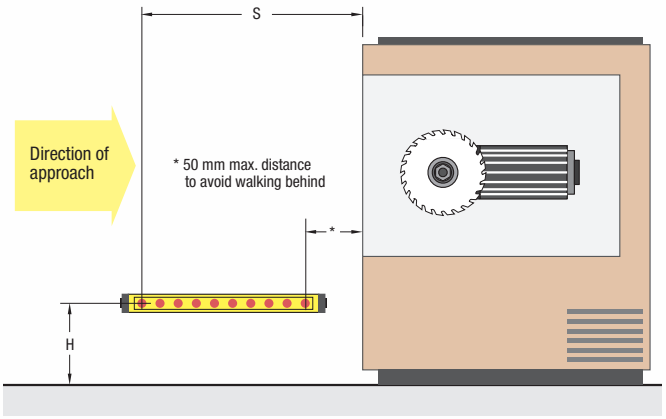

Calculation example for systems with a resolution of <40 mm

Formula according to EN999/ISO13855:S = (K x T) + C

Where S = minimum distance in millimeters from the danger zone to the detection point, line, plane or zone. If the result of the calculation is less than 100mm, a distance of at least 100mm must still be maintained.

K = Approach speed in mm/s. In the close area of 500mm, the speed is calculated at 2000mm/s. If the distance is greater than 500 mm, K can be calculated as 1600 mm/s. In this case, however, a minimum of 500 mm applies for the safety distance.

T = the overall system stopping performance in seconds

T = $t_1 + t_2 + t_3$
t_1 = response time of the safety sensor in seconds.
t_2 = response time of the safety interface t_{si}, if any.
t_3 = maximum stopping time of the machine t_m in seconds.
Please refer to the technical information of the safety Interface and the machine for the response time and stopping time details.

C = 8 x (d-14 mm), but not less than zero.
d = minimum object resolution of the safety sensor in millimeters, therefore:

S = (2000 mm/s x T) + 8 x (d-14 mm)

This formula applies for all minimum distances of S up to and including 500 mm. The minimum value of S hall not be less than 100 mm.

If S is found to be greater than 500 mm using the formula above, then the formula below can be used. In this case the minimum value of S shall not be less than 500 mm.

S = (1600 mm/s x T) + 8 x (d-14 mm)

The height of the protective field "H" above the reference plane and the resolution "d" of the safety sensor system have the following relationship:

H_{min} = 15 x (d -50) or d = (H_{min} / 15) + 50

H_{min} = Height of the protective field above the reference plane, maximum height = 1000 mm.
It is considered that if height is equal or less than 300 mm, adults can not crawl under.

d = resolution of the safety sensor system

S = (K x T) + C
For K and T please refer to the previous chapter

C = (1200 mm - 0,4 x H) but not less than 850 mm (arm length)
H = Height of protective field above the floor

S = (1600 mm x T) + (1200 - 0,4 x H)

Technical information

Safety distance and beam heights in access guarding

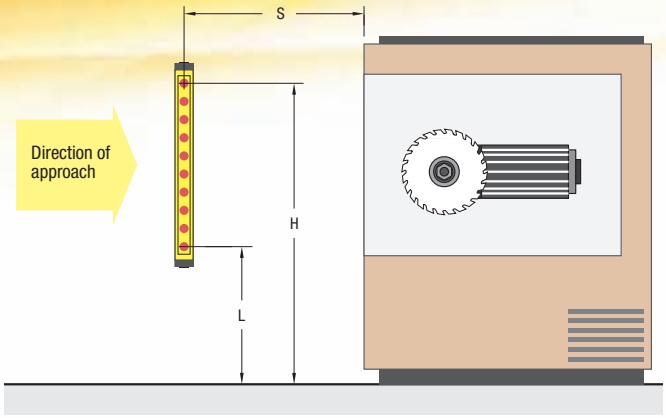

According to EN999/ISO13855 and EN294:

Resolution	Lowest beam above reference plane	Highest beam above reference plane	Additional amount C (see formula)
14 mm	In accordance with EN 294	In accordance with EN 294	0 mm
30 mm	In accordance with EN 294	In accordance with EN 294	128 mm

The height of the protective field "H" above the reference plane and the resolution "d" of the safety sensor have the following relationship:

S = (K x T) + C
For K and T please refer to the previous chapter

C = 8 x (d - 14)
d = resolution of the safety sensor system

S = (2000 mm x T) + 8 x (d - 14)

Additional Guarding

Areas of access to the point of hazardous operation not guarded by a safety sensor must be protected by suitable means such as a fixed barrier guard, an interlocked guard or a safety mat system.

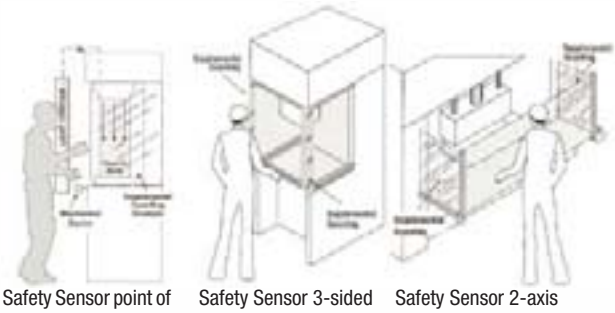

Safety Sensor point of operation guarding | Safety Sensor 3-sided guarding | Safety Sensor 2-axis guarding

Muting

Production processes need exchange of material. In many applications there is no possibility to find a solution that protects the workers and enables this flow of material by just opening parts of the mechanical guarding. Safety Sensors are the common solution – but the machine just stops when the protective field is obscured.

As a function in Safety Sensors, Muting enables a safe and automatic suppression of the safety function. Additional, appropriately selected and positioned sensors detect the material and ensure that a person will not enable the muting function.

Muting is often used to protect Palletizers or wrapping machines like shown in the example:

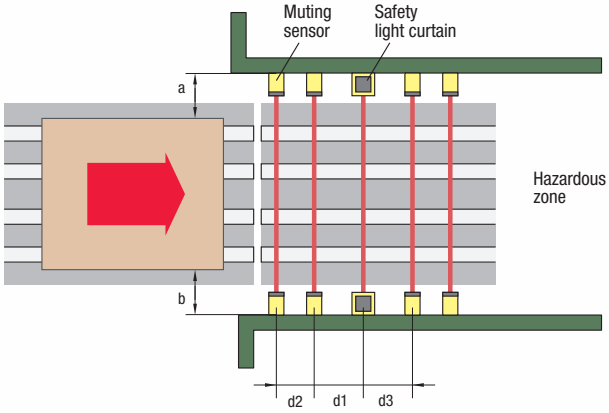

Blanking

This function can be used to allow the presence of parts of the workpiece or the machine in the detection zone of the Safety Sensor. If Blanking is used, the outputs remain ON even if there are one or more beams interrupted. This has an influence on the detection capability and results in a bigger safety distance in some applications.

Basically there a different ways to set up a blanking application:

Fixed Blanking

In this mode, beams in a defined area are "ignored". This is used for applications like shown, e.g. a supporting table.
The gaps on the sides of this supporting table need additional guarding by fixed guards to ensure there is no access by the worker.

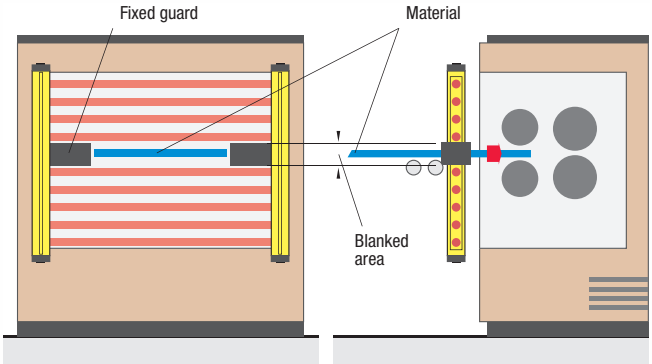

Floating Blanking

In machines where material is cut or bended, one or more beams along the whole Safety Sensor are "ignored". In setup, the number of disabled beams is defined and programmed. Especially in this operation mode, a close look on the resulting resolution of the Safety Sensor and the Safety distance is mandatory.

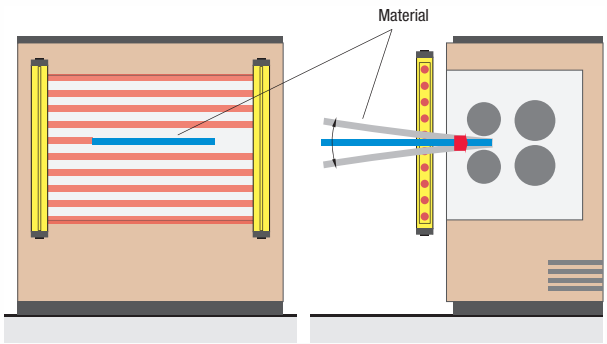

Related products		
Robust Housing	**Small Housing**	**TGR-Safety Sensors**
MS2800, MS4800	F3SN-A, F3S-B	F3S-TGR-SB_ -K_ -_ _ _ F3S-TGR-SB_ -K_ C-_ _ _

7. Safety Relay Units in different safety categories

The risk assessment according to EN ISO 14121-1 will result in a safety category acc. EN 954-1 (or a performance level acc. EN ISO 13849-1).
Safety Relay Units are ready to be used in applications up to a safety category 4 – but how to connect the inputs and outputs in the correct way?

Safety Category 2

Basic Safety Principle: Test of the components in use

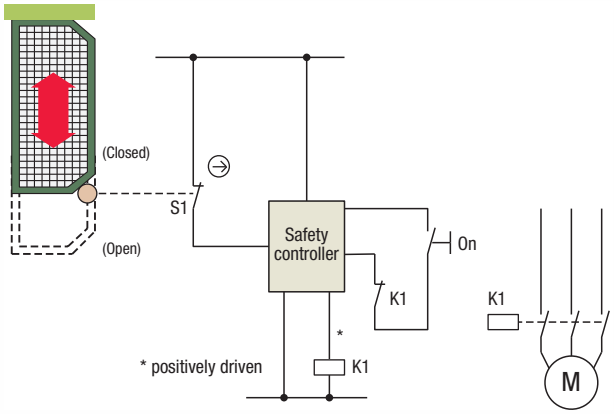

Safety Input: A Safety Limit Switch or a Safety Door Switch is used to monitor the position of the guard.

Safety Control: A Safety Relay unit is used to check the correct operation of the Safety Limit Switch or Safety Door Switch. Additionally, a periodical test of the operation is mandatory. Since there is only one Safety Switch, this test will show if the Switch or the contactor on the output side fails. The reaction on the failure shall be a safe condition of the machine.

Safety Output: A Contactor is used on the Safety Output. Attention – only if above test is carried out, this circuit can conform Safety Category 2 acc. EN 954-1. In other cases, a second output path is recommended.

Safety Category 3

Basic Safety Principle: Redundancy of the components to ensure tolerance against one single fault

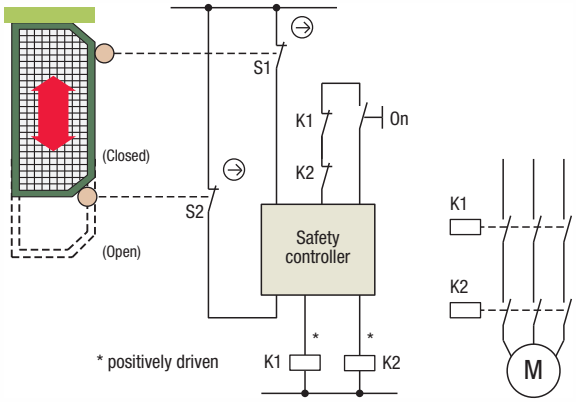

Safety Input: Redundant Safety Limit Switches or Safety Door Switches are used to monitor the position of the guard.

Safety Control: A Safety Relay unit is used to check the correct operation of the Safety Limit Switches or Safety Door Switches. Based on the redundant input and output components, a failure of one of these components can be detected by the Safety Control and a safe condition can be reached.

Safety Output: Redundant Contactors are used on the Safety Outputs. The function of the contactors is monitored via the feedback contacts. If one of the NO contacts weld, the feedback will disable the reset function of the Safety Control.

Safety Category 4

Basic Safety Principle: Redundancy of the components and testing to ensure tolerance against more than one single fault

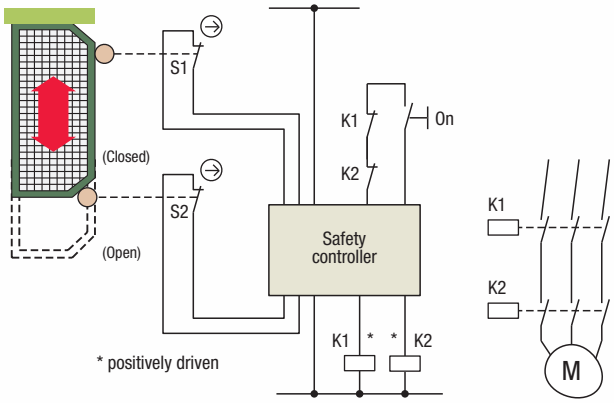

Safety Input: Redundant Safety Limit Switches or Safety Door Switches are used to monitor the position of the guard. Separate in- and outputs for the switches enable the Safety Control to detect cross connections between wires etc.

Safety Control: A Safety Relay unit is used to check the correct operation of the Safety Limit Switches or Safety Door Switches. The Safety Relay unit uses complementary signals to test the correct behavior of the input signals. Redundant output signals and components guarantee that a safe condition of the system can be reached in case of a failure. So an accumulation of failure will not result in a loss of safety.

Safety Output: Redundant Contactors are used on the Safety Outputs. The function of the contactors is monitored via the feedback contacts. If one of the NO contacts weld, the feedback will disable the reset function of the Safety Control.

Related products			
Programmable Safety Units	**Flexible Safety Relay Unit**	**Expandable Safety Relay Unit**	**Compact Safety Relay Unit**
NE1A-SCPU01, NE1A-SCPU02	G9S-X	G9S-A	G9S-B

8. Stop Categories

Last element in the safety chain is the hazardous movement by an electric motor, pneumatic or hydraulic cylinders. Based on the application, it is necessary to find the correct way to stop a movement without adding additional hazards for the workers. IEC/EN 60204-1 defines three different Stop Categories:

Stop Category 0

Definition: Power is removed from the machine actuators e.g. the motor to stop the movement immediately. So the motor will finally stop, but there is no control how long this will take, since the mechanical load may vary. To have faster stopping, brakes or other stopping can be used in addition.

Behavior:

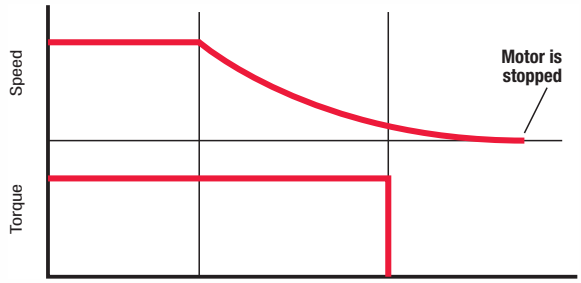

Application: All applications where a variation in the stopping time does not lead to hazardous conditions.

Stop Category 1

Definition: This is a controlled stop condition with power available to the machine actuators to achieve the stop. Power to the machine actuators is removed when the stop condition is finally reached. The time to remove the power can be realized by using a safe off-delay timer in a Safety Relay Unit or a Unit to safely monitor the Standstill of a machine.

Behavior:

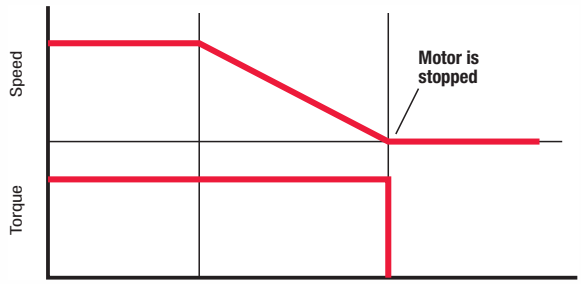

Application: All applications where proper ramp-down is needed. Heavy loads may need a Stop Category 1 since there can be an additional risk from the heavy load collapsing.
All applications where precise stopping performance is needed like unlocking a safety door on a fence system.

Stop Category 2

Definition: This is a controlled stop condition with power available to the machine actuators to achieve the stop. Power to the machine actuators is kept after the stop condition is finally reached. The position of the motor has to be monitored as a Safety function while the motor is in Stop mode. If the position is left, the power to the motor is removed in a safe way.

Behavior:

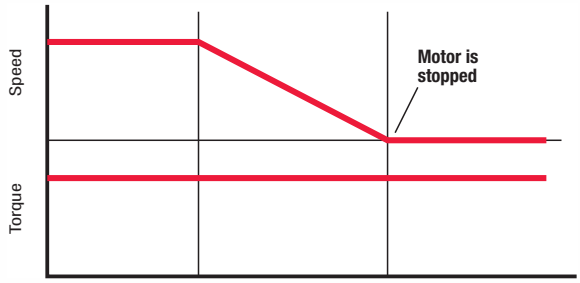

Application: All applications where a certain safe position needs to be reached in a technical process.

9. Safety Drives

Electric Motors, covering from Standard AC motor to State of the Art Servo Motors, traditionally were a hot spot during the machine risk evaluation, since stopping and controlling 'load' dynamics in a safe way in the past implied a big amount of external devices and engineering hours in order to achieve the expected safety level. Moreover as complexity of the safety solution increases, machine certification becomes more complex too.

Looking into European regulation, Machine Directive stipulates that machinery sold in Europe should not present a risk for the operator working with this machine. The only way to achieve this is to make sure that any errors in the safety system will not lead to a loss of the safety function.

A Safety Drive is an Electronic Motion Driver with embedded safety technology, therefore a relevant part of the functional safety is managed by the drive itself, reducing the complexity of the overall machine safety solution. A notified body confirms that the drive and its components are certified.

Benefits of Safety Drives:

- Faster reaction times – contactors are not necessary any longer
- Reduction of Total Cost of Ownership – design of the circuit is more simple, wearing elements are removed, wiring is more simple
- More simple Machine Certification since all elements have a declaration of conformity

Related products
Inverter with integrated Safety Function
V1000

Traditional safety circuit

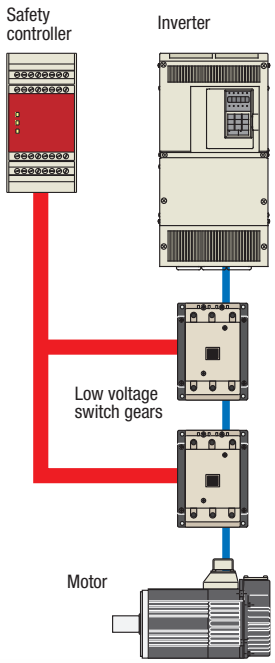

Safety circuit with safety drive

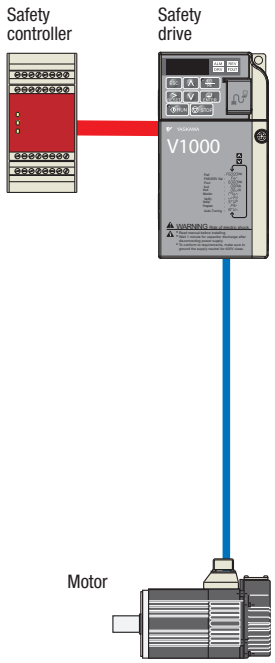

10. Definition of Terms and abbreviations

Term	Explanation
Actuator	An actuator converts electrical signals into mechanical, hydraulic or pneumatic quantities.
Blanking	Please see the Safety Sensor Section for details
Category	The classification of the safety-related part of the control system is characterized by its behavior under fault conditions and the immunity against faults.
Channel	An element or group of elements executing a function independently. For Safety Category 3 or 4 acc. EN 954-1 (EN ISO 13849-1), a two-channel structure is recommended to withstand at least one single fault.
Danger	Definition from ISO 12100-1: Potential source of damage. This can be danger due to crushing, pinching, electric shock etc.
Emergency stop	Definition from EN 60204-1, Annex D: An operation in an emergency that is designed to stop a process or movement that is potentially dangerous.
Failure	A component or device Is no longer executing its specific function
Fault	A component is in an unintentional status, characterized by the loss of the capability to execute a specified function
Feedback circuit	Contactors can be monitored by using a feedback circuit. The NC contacts of a contactor can be used to monitor the operability of the contactors by a Safety Relay Unit or a programmable Safety Controller. If one of the NO contacts is welded, a restart is blocked by the Safety Relay Unit.
Functional safety	Part of the safety of the machine and the machine control system which depends on the correct functioning of the Safety-related electrical control systems, other technology safety-related system and external risk reduction facilities.
Machinery safety	State achieved when measures have been taken to reduce the risk to an accepted residual risk after the risk assessment has been carried out.
Muting	Please see the Safety Sensor Section for details
Risk	The combination of the probability of the occurrence of damage and the extent of the damage.
Safety	The collective term of machinery safety and functional safety.
Safety function	If this function fails, the risk of the machine or the control system can increase.
Security	Common term for protective guarding. A person or item is safeguarded through monitoring.
Stop category	EN 60204-1 defines three different stopping functions. Please refer to the Stop Category Section for details.

Abbreviations	Explanation
B10d	Number of cycles until 10% of components fail causing danger
λ	Failure Rate
λ**s**	Failure Rate (failure to safe side)
λ**d**	Failure Rate (failure to danger)
CCF	Common cause failure
DC	Diagnostic coverage
DCavg	Average diagnostic coverage
Designated architecture	Designated architecture of an SRP/CS
HFT	Hardware fault tolerance
MTBF	Mean time between failures (during normal operation)
MTTF	Mean time to failure
MTTFd	Mean time to dangerous failure
MTTR	Mean time to repair (always significantly less than the MTTF)
PFH	Probability of failure per hour
PFHD	Probability of dangerous failure per hour
PL	Performance Level, Ability of safety-related parts to perform a safety function under foreseeable conditions, to achieve the expected risk reduction
PLr	Required performance level
SIL	Safety integrity level
SILCL	SIL claim limit (suitability)
SRP/CS	Safety-related parts of a control system
SRECS	Safety-related electrical control systems
T1	Lifetime or proof test interval, assumed lifetime of safety system
T2	Diagnostic test interval
TM	Mission time
ß	Susceptibility to common cause failure
C	Duty cycle (per hour) of an electromechanical component
SFF	Safe failure fraction

11.Reliability data of Omron components

Below tables show the reliability data of Omron components and give a reference to the relevant standard:

Emergency stop switches

Model name	B_{10d}	Remarks
A165E	100.000	Adopted EN ISO 13849-1 Annex C, B_{10d} fixed
A22E	100.000	Adopted EN ISO 13849-1 Annex C, B_{10d} fixed
ER5018	1.500.000	Adopted EN ISO 13849-1 Annex C, B_{10d} fixed
ER6022	1.500.000	Adopted EN ISO 13849-1 Annex C, B_{10d} fixed. Additionally valid for all XER and stainless steel models
ER1022	1.500.000	Adopted EN ISO 13849-1 Annex C, B_{10d} fixed. Additionally valid for all XER models
ER1032	1.500.000	Adopted EN ISO 13849-1 Annex C, B_{10d} fixed. Additionally valid for all XER models

Safety limit switches

Model name	B_{10d}	Remarks
D4B-_N*1	2.000.000	From table in annex C of EN ISO 13849-1
D4N*1	2.000.000	From table in annex C of EN ISO 13849-1
D4NH*1	2.000.000	From table in annex C of EN ISO 13849-1
D4N-_R*1	2.000.000	From table in annex C of EN ISO 13849-1
D4F*1	2.000.000	From table in annex C of EN ISO 13849-1

*1 If fault exclusion for direct opening action of NO and NC is possible.

Safety door switches

Model name	B_{10d}	PL	Category	$MTTF_d$	DC	Remarks
D4NL	2.000.000	n.a.	n.a.	n.a.	n.a.	Adopted EN ISO 13849-1 Annex C, B_{10d} fixed
D4GL*1	2.000.000	n.a.	n.a.	n.a.	n.a.	From table in annex C of EN ISO 13849-1
D4BL*1	2.000.000	n.a.	n.a.	n.a.	n.a.	From table in annex C of EN ISO 13849-1
D4NS	2.000.000	n.a.	n.a.	n.a.	n.a.	Adopted EN ISO 13849-1 Annex C, B_{10d} fixed
D4BS*1	2.000.000	n.a.	n.a.	n.a.	n.a.	From table in annex C of EN ISO 13849-1
F3S-TGR-N_C	3.300.000	n.a.	n.a.	n.a.	n.a.	Adopted EN ISO 13849-1 Annex C, B_{10d} fixed
F3S-TGR-N_R	3.300.000	n.a.	n.a.	n.a.	n.a.	Adopted EN ISO 13849-1 Annex C, B_{10d} fixed
D40A + G9SX-NS	n.a.	d	3	100 years	95%	Adopted EN ISO 13849-1 Annex C, PL data fixed

*1 If fault exclusion for direct opening action is possible.

Safety sensors

Model name	B_{10d}	PL	Category	$MTTF_d$	DC	Remarks
MS2800E_	n.a.	c	2	51 years	99%	Adopted EN ISO 13849-1 Annex C, PL data fixed
MS4800E_	n.a.	e	4	51 years	99%	Adopted EN ISO 13849-1 Annex C, PL data fixed
F3S-TGR-CL2_	n.a.	c	2	450 years	99%	Adopted EN ISO 13849-1 Annex C, PL data fixed
F3S-TGR-CL4_	n.a.	e	4	450 years	99%	Adopted EN ISO 13849-1 Annex C, PL data fixed

Safe control systems

Model name	B_{10d}	PL	Category	$MTTF_d$	DC	Remarks
G9SA-301	n.a.	e	4	100 years	99%	Adopted EN ISO 13849-1 Annex C, PL data fixed
G9SA-300-SC	n.a.	e	4	100 years	99%	Adopted EN ISO 13849-1 Annex C, PL data fixed
G9SB-series*1	n.a.	e	4	100 years	99%	Adopted EN ISO 13849-1 Annex C, PL data fixed
G9SB-3010	n.a.	d	3	100 years	99%	Adopted EN ISO 13849-1 Annex C, PL data fixed
G9SP-N10S	n.a.	e	4	n.a.	n.a.	PFHd = 7,80E-11
G9SP-N10D	n.a.	e	4	n.a.	n.a.	PFHd = 9,96E-11
G9SP-N20S	n.a.	e	4	n.a.	n.a.	PFHd = 8,55E-11
G9SX-BC	n.a.	e	4	100 years	97%	Adopted EN ISO 13849-1 Annex C, PL data fixed
G9SX-AD	n.a.	e	4	100 years	97%	Adopted EN ISO 13849-1 Annex C, PL data fixed
G9SX-ADA	n.a.	e	4	100 years	97%	Adopted EN ISO 13849-1 Annex C, PL data fixed
G9SX-EX	n.a.	e	4	100 years	99%	Adopted EN ISO 13849-1 Annex C, PL data fixed
G9SX-SM	n.a.	e	4	100 years	98%	Adopted EN ISO 13849-1 Annex C, PL data fixed
G9SX-LM	n.a.	d	3	100 years	82%	Adopted EN ISO 13849-1 Annex C, PL data fixed
NE1A-SCPU01	n.a.	e	4	100 years	99%	Adopted EN ISO 13849-1 Annex C, PL data fixed
NE1A-SCPU02	n.a.	e	4	100 years	99%	Adopted EN ISO 13849-1 Annex C, PL data fixed
NE0A-SCPU01	n.a.	e	4	100 years	99%	Adopted EN ISO 13849-1 Annex C, PL data fixed
DST1-ID12SL-1	n.a.	e	4	100 years	99%	Adopted EN ISO 13849-1 Annex C, PL data fixed
DST1-MD16SL-1	n.a.	e	4	100 years	99%	Adopted EN ISO 13849-1 Annex C, PL data fixed
DST1-MRD08SL-1	n.a.	e	4	100 years	99%	Adopted EN ISO 13849-1 Annex C, PL data fixed
DST1-XD0808SL-1	n.a.	e	4	100 years	99%	Adopted EN ISO 13849-1 Annex C, PL data fixed

*1 Except G9SB-3010

Safe actuators

Model name	B_{10d}	Remarks
G7SA*1	400.000	According to IEC 61810-1, valid for DC13, Inductive load Ie
G7SA*1	400.000	According to IEC 61810-1, valid for DC13, Inductive load Ie/2
G7SA*1	400.000	According to IEC 61810-1, valid for DC13, Inductive load Ie/4
G7SA*1	400.000	According to IEC 61810-1, valid for AC15 load

*1 Refer to the load characteristic to select correct B_{10d} value

Please check Omron in the Internet for updated information:
http://industrial.omron.eu/safety

Further information can be found in the SISTEMA library:
http://industrial.omron.eu/safety

Refer to the other guides and the DVD

Your guides to industrial sensing and vision, ident & measurement solutions

Your technical library for complete dimension drawings, technical specifications and performance charts

OMRON EUROPE B.V. Wegalaan 67-69, NL-2132 JD, Hoofddorp, The Netherlands Tel: +31 (0) 23 568 13 00 Fax: +31 (0) 23 568 13 88 www.industrial.omron.eu

Austria
Tel: +43 (0) 2236 377 800
www.industrial.omron.at

Belgium
Tel: +32 (0) 2 466 24 80
www.industrial.omron.be

Czech Republic
Tel: +420 234 602 602
www.industrial.omron.cz

Denmark
Tel: +45 43 44 00 11
www.industrial.omron.dk

Finland
Tel: +358 (0) 207 464 200
www.industrial.omron.fi

France
Tel: +33 (0) 1 56 63 70 00
www.industrial.omron.fr

Germany
Tel: +49 (0) 2173 6800 0
www.industrial.omron.de

Hungary
Tel: +36 1 399 30 50
www.industrial.omron.hu

Italy
Tel: +39 02 326 81
www.industrial.omron.it

Netherlands
Tel: +31 (0) 23 568 11 00
www.industrial.omron.nl

Norway
Tel: +47 (0) 22 65 75 00
www.industrial.omron.no

Poland
Tel: +48 (0) 22 645 78 60
www.industrial.omron.pl

Portugal
Tel: +351 21 942 94 00
www.industrial.omron.pt

Russia
Tel: +7 495 648 94 50
www.industrial.omron.ru

South-Africa
Tel: +27 (0) 11 608 3041
www.industrial.omron.co.za

Spain
Tel: +34 913 777 900
www.industrial.omron.es

Sweden
Tel: +46 (0) 8 632 35 00
www.industrial.omron.se

Switzerland
Tel: +41 (0) 41 748 13 13
www.industrial.omron.ch

Turkey
Tel: +90 212 467 30 00
www.industrial.omron.com.tr

United Kingdom
Tel: +44 (0) 870 752 08 61
www.industrial.omron.co.uk

More Omron representatives www.industrial.omron.eu

Authorised Distributor:

ADVANCED INDUSTRIAL AUTOMATION

Control Systems
• Programmable logic controllers • Human-machine interfaces • Remote I/O

Motion & Drives
• Motion controllers • Servo systems • Inverters

Control Components
• Temperature controllers • Power supplies • Timers • Counters • Programmable relays
• Digital panel indicators • Electromechanical relays • Monitoring products • Solid-state relays
• Limit switches • Pushbutton switches • Low voltage switch gear

Sensing & Safety
• Photoelectric sensors • Inductive sensors • Rotary encoder • Cable connectors
• Displacement & width-measuring sensors • Vision systems • Safety networks
• Safety sensors • Safety units/relay units • Safety door/guard lock switches

Cat. No. Y207-EN2-03+SafetyGuide2011